Pure Appl. Chem.; doi:10.1351/PAC-CON-09-11-07

Supplementary Material

Variation of aromaticity by twisting or expanding the ring content

Remi Chauvin‡, Christine Lepetit, Valérie Maraval, and Léo Leroyer

Laboratory of Coordination Chemistry (LCC), CNRS, 205, Route de Narbonne, F-31077 Toulouse, France; Université de Toulouse; UPS, INPT; LCC; F-31077 Toulouse, France

In the following informations, the scheme, figure, and reference numbers correspond to those used in the corresponding article: *Pure Appl. Chem.*, doi:10.1351/PAC-CON-09-11-07 © 2010 IUPAC.

1. Analytical expressions of REs for [2m]annulenes

The listed results are taken from ref. [20] and Supporting Information thereof, or derived by similar methods.

• The HMO energy of generic [2m]annulenes (C_{2m} monocycles) is concisely expressed as:

$$E(C_{2m}) = \frac{4\sin^2(m\pi/2) + 4\cos^2(m\pi/2)\cos[\pi/(2m)]}{\sin[\pi/(2m)]}$$

• The Hückel resonance energy (HRE) reads:

$$\mathrm{HRE}(C_{2m}) = E(C_{2m}) - 2m \sim 2(\frac{4}{\pi} - 1)m - \frac{[3(-1)^m+1]\pi}{6m} + \ldots$$

• The Breslow resonance energy (BRE) reads:

$$\mathrm{BRE}\,(C_{2m}) = E(C_{2m}) - \frac{2}{\sin(\frac{\pi}{4m+2})} + 2 \sim (2 - \frac{4}{\pi}) - \frac{[1+2(-1)^m]\pi}{4m} + \frac{\pi}{24m^2} + \ldots..$$

• The generic resonance energy ($RE_{p,q}$) reads:

$$\mathrm{RE}_{p,q}(C_{2m}) = E(C_{2m}) + \frac{2m}{q}\left\{\frac{1}{\sin(\frac{\pi}{4p+2})} - \frac{1}{\sin[\frac{\pi}{4(p+q)+2}]}\right\}$$

$$\mathrm{RE}_{p,q}(C_{2m}) = (\frac{8}{\pi} + \frac{2}{q}\left\{\frac{1}{\sin(\frac{\pi}{4p+2})} - \frac{1}{\sin[\frac{\pi}{4(p+q)+2}]}\right\})\, m + .\, o(1/m)$$

where $o(1/m)$ is independent from p and q.

* If p or q (or both) varies as m (and the tends to infinity as m – >∞), a simple Taylor expansion of the sine function gives:

$$RE_{p,q}(C_{2m}) \sim \frac{m}{q}\left[\frac{2}{\sin(\frac{\pi}{4p+2})} - \frac{8p+4}{\pi}\right] \qquad \text{for } m \to \infty$$

* If p = 1 and q = am+b:

$$RE_{1,m-r}(C_{2m}) = E(C_{2m}) + \left(4 - \frac{2}{\sin(\frac{\pi}{4(am+b)+6})}\right) m/(am+b) \xrightarrow[m\to\infty]{} \left(4 - \frac{12}{\pi}\right)/a \approx 0.1802/a$$

• The double-cut aromatic cyclic energy (ACE_{DC}) reads:

$$ACE_{DC}(C_{2m}) = E(C_{2m}) + 4 + \frac{2}{\sin(\frac{\pi}{4m-2})} - \frac{4}{\sin(\frac{\pi}{4m+2})}$$

• The multiple-cut aromatic cyclic energy (ACE_{MC}) or Hess-Schaad resonance energy (HSRE) reads:

$$ACE_{MC}(C_{2m}) = RE_{m-1,1}(C_{2m}) = HSRE(C_{2m}) = E(C_{2m}) + \frac{2m}{\sin(\frac{\pi}{4m-2})} - \frac{2m}{\sin(\frac{\pi}{4m+2})}$$

2. Variation of cyclobutadiene TRE through the variable β Hückel method

The semi-empirical variable β Hückel method allows for the comparison between different geometries of cyclobutadiene in the singlet spin state. Generic rectangular geometries with bond lengths d_1 and d_2 (Scheme 7) are associated with corresponding resonance integrals β_1 and β_2 through the empirical formulae [23]:

$$\beta_i = \exp[0.55\ P_i - 0.3666] \text{ (in reference } \beta \text{ units)}$$

$$d_i = 1.524 - 0.194\ P_i \text{ (in Å)}$$

where P_i is the π-bond order (i = 1, 2). The coefficients were determined within the framework of the Harmonic oscillator model (HOM) by fitting the π-bond orders and bond lengths in ethylene ($P'^\circ = 1$, $d'^\circ = 1.33$ Å) and in a fully delocalized polyene such as benzene ($P^\circ = 2/3$, $d^\circ = 1.395$ Å, $\beta^\circ = 1$).

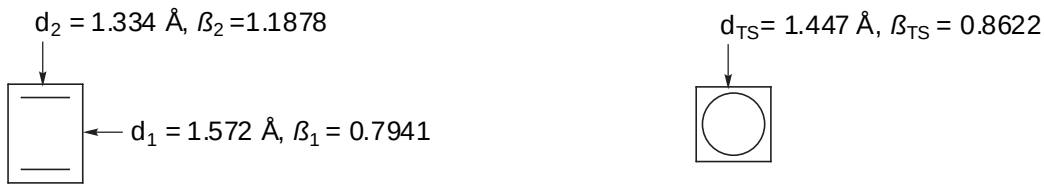

Scheme 7. Equilibrium (B3PW91/6-31G**) and transition state (CASSCF/cc-pVTZ) geometries of cyclobutadiene in the singlet state [24,25]. The variable resonance integrals values are obtained from the empirical formulae of ref. [23] and given in reference β units.

The characteristic polynomial of any cyclobutadiene geometry reads:

$$P^0(x) = x^4 - 2(\beta_1^2 + \beta_2^2)\, x^2 + (\beta_1^2 - \beta_2^2)^2,$$

the four eigenvalues being: $\lambda^0_k = \pm\,(\beta_1 \pm \beta_2)$, $1 \le k \le 4$.

It can be shown that the corresponding matching polynomial reads:

$$P^{ac}(x) = x^4 - 2(\beta_1^2 + \beta_2^2)\, x^2 + (\beta_1^4 + \beta_2^4),$$

the four roots being: $\lambda^{ac}_k = \pm\,[\beta_1^2 + \beta_2^2 \pm \sqrt{2}\ \beta_1\beta_2]^{1/2}$, $1 \le k \le 4$.

Assuming $\beta_1 \le \beta_2$, the topological resonance energy of the ground state cyclobutadiene is therefore:

$$\mathrm{TRE} = 4\,\beta_2 - 2\,[\beta_2^2 + \beta_1^2 + \sqrt{2}\ \beta_1\beta_2]^{1/2} - 2\,[\beta_2^2 + \beta_1^2 - \sqrt{2}\ \beta_1\beta_2]^{1/2}$$

$$\frac{\mathrm{TRE}}{\beta_2} = 4 - 2\,[1 + u^2 + \sqrt{2}\ u]^{1/2} - 2\,[1 + u^2 - \sqrt{2}\ u]^{1/2}$$

where $u = \beta_1/\beta_2$ (Figure 4).

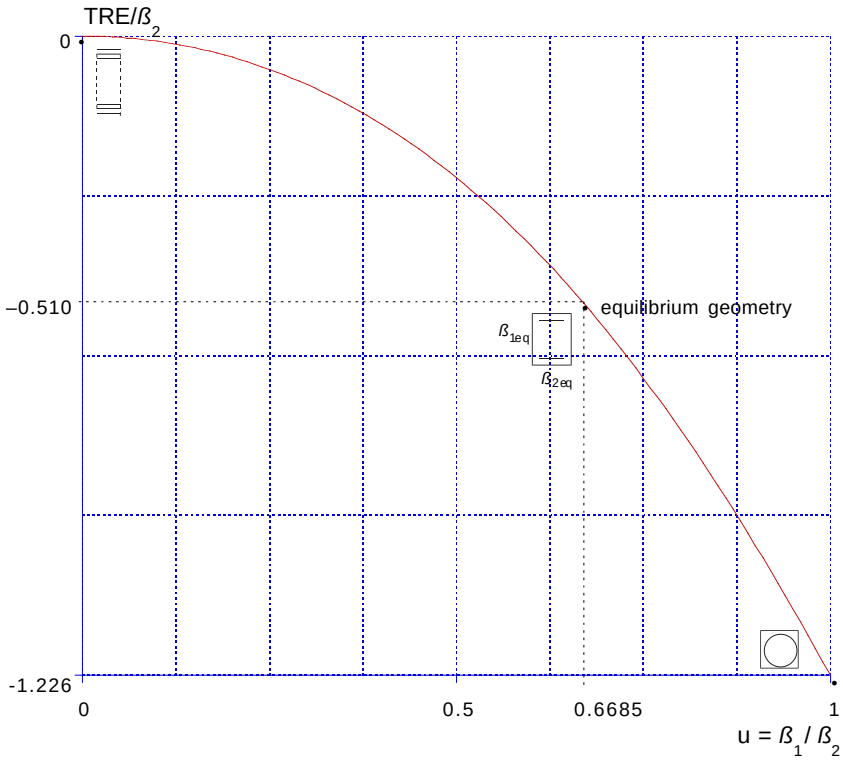

Figure 4. Variation of the TRE/β_2 value (where β_2 is given in β units) of singlet cyclobutadiene in geometries ranging from square (u = 1) to infinitely rectangular (u = 0, in the dissociated state C_4H_4 = 2 H–C≡C–H).

At the B3PW91/6-31G**, the minimum on the potential energy surface corresponds to a rectangular geometry with bond lengths d_1 = 1.572 Å and d_2 = 1.334 Å (Scheme 7) [24]. The equilibrium geometry thus corresponds to $u_{eq} = \beta_{1eq}/\beta_{2eq} = 0.7941/1.1878 = 0.6685$ and thus to:

$$TRE_{eq} = -0.510\ \beta_{2eq} = -0.606$$

The square geometries correspond to $u_{sq} = \beta_{1sq}/\beta_{2sq} = 1$, and thus to:

$$TRE_{sq} = -1.226\ \beta_{sq}$$

For the particular transition state square geometry, d_{TS} = 1.447 Å at the CASSCF level [25], and thus $\beta_{TS} = 0.8622$, and:

$$TRE_{TS} = -1.226\ \beta_{TS} = -1.057$$

The ground state singlet cyclobutadiene in its equilibrium geometry is therefore antiaromatic, but *ca* twice less than the squared cyclobutadienes in either the HOM reference ($\beta_{sq} = 1$) or transition state ($\beta_{TS} = 0.8622$) geometries. The squared cyclobutadiene is also less antiaromatic in the transition state geometry (–1.057) than in the HOM reference (–1.226)[9,10,22].

3. HMO calculations of Hückel and Möbius TREs (data for Figure 5, (eq.12) and (eq. 13b))

Energy values are given in units of uniform resonance integral ($\beta < 0$). Cb denotes the cyclobutadienyl group (C_4H_3), Ph denotes the phenyl group (C_6H_5). For molecules with an even ring size and all the substituents of even type, the TRE values of the Hückel and Möbius forms have been calculated using E^{ac} values obtained from the empirical (eq. 12a) if G^0 is aromatic and G^1 antiaromatic, and from the empirical (eq. 12b) if G^1 is aromatic and G^0 antiaromatic. For molecules with an even ring size and at least one odd-type substituent, the TRE values of the Hückel and Möbius forms have been calculated using E^{ac} values obtained from the empirical (eq. 13b): this demonstrates the high accuracy of (eq. 13b).

Molecule	no π e$^-$	E^0 (Hückel)	E^1 (Möbius)	E^{ac} (acyclic)	TRE(H) (Hückel)	TRE(H)calc empirical E^{ac}	TRE(M) (Möbius)	TRE(M)calc empirical E^{ac}
Even ring size, even-type substituents only								
Antiaromatic Hückel rings:						E^{ac}(eq.12b)		E^{ac}(eq.12b)
cyclobutadiene	4	4.0000	5.6560	5.2260	-1.226	-1.197	0.431	0.459
vinylcyclobutadienene	6	6.6027	8.0547	7.6627	-1.060	-1.050	0.392	0.402
1,3-divinylcyclobutadiene	8	9.1530	10.4525	10.0943	-0.941	-0.940	0.358	0.359
1,2-divinylcyclobutadiene	8	9.2111	10.4721	10.1200	-0.909	-0.912	0.352	0.349
trivinylcyclobutadiene	10	11.7690	12.8892	12.5704	-0.801	-0.811	0.319	0.309
tetravinylcyclobutadiene	12	14.3372	15.3260	15.0401	-0.703	-0.716	0.286	0.273
1,2-C4H2(CH=CH-CH=CH2)2	12	14.3875	15.4882	15.1604	-0.773	-0.797	0.328	0.304

1,3-C4H2(CH=CH-CH=CH2)2	12	14.2787	15.4548	15.1155	-0.837	-0.851	0.339	0.325
C4H(CH=CH-CH=CH2)3	16	19.4879	20.4194	20.1338	-0.646	-0.675	0.286	0.256
C4(CH=CH-CH=CH2)4	20	24.6073	25.3840	25.1401	-0.533	-0.564	0.244	0.213
Cb-(CH)7CH2	12	14.3258	15.6133	15.2394	-0.914	-0.932	0.374	0.356
1,2-C4H2(CCH2)[(CH)7CH2]	14	16.9353	18.0399	17.7076	-0.772	-0.800	0.332	0.305
Cb-C(CH2)2	7	7.3006	8.8284	8.4243	-1.124	-1.105	0.404	0.423
C4(C(CH2)2)4	16	17.1744	18.3799	18.0489	-0.875	-0.873	0.331	0.333
Cb-C(CH2)(CHCH2)	8	9.0210	10.4914	10.0943	-1.073	-1.064	0.397	0.407
Cb-(CH)2C(CH2)(CHCH2)	10	11.6078	12.9789	12.5970	-0.989	-0.992	0.382	0.379
C8H8	8	9.6569	10.4525	10.2516	-0.595	-0.576	0.201	0.220
vinyl-C8H7	10	12.1638	12.8892	12.7038	-0.540	-0.525	0.185	0.200
octavinyl-C8	24	29.6632	30.0801	29.9711	-0.308	-0.304	0.109	0.113
C12H12	12	14.9282	15.4548	15.3226	-0.394	-0.382	0.132	0.145
C16H16	16	20.1094	20.5033	20.4046	-0.295	-0.287	0.099	0.107
C20H20	20	25.2550	25.5698	25.4910	-0.236	-0.230	0.079	0.085
C24H24	24	30.3830	30.6452	30.5796	-0.197	-0.193	0.066	0.070
C28H28	28	35.5010	35.7256	35.6694	-0.168	-0.166	0.056	0.059
Aromatic Hückel rings:						E^{ac}(eq.12a)		E^{ac}(eq.12a)
benzene	6	8.0000	6.9282	7.7270	0.273	0.280	-0.799	-0.792
styrene	8	10.4243	9.4641	10.1753	0.249	0.251	-0.711	-0.709
4-vinylstyrene	10	12.8573	12.0000	12.6306	0.227	0.224	-0.631	-0.633
3,5-divinylstyrene	12	15.2688	14.4657	15.0564	0.212	0.210	-0.591	-0.593
hexavinylbenzene	18	22.6562	22.0725	22.4985	0.158	0.153	-0.426	-0.431
Ph(CH)11CH2	18	23.0726	22.2585	22.8417	0.231	0.213	-0.583	-0.601
Ph-C(CH2)2	9	11.1900	10.1847	10.9321	0.258	0.263	-0.747	-0.742
C6(C(CH2)2)6	24	27.1905	26.4447	26.9950	0.195	0.195	-0.550	-0.551
Ph-C(CH2)(CHCH2)	10	12.8573	11.8884	12.6052	0.252	0.253	-0.717	-0.716
Ph-(CH)2C(CH2)(CHCH2)	12	15.3544	14.4486	15.1134	0.241	0.237	-0.665	-0.669
C10H10	10	12.9443	12.3107	12.7849	0.159	0.166	-0.474	-0.468
C14H14	14	17.9758	17.5251	17.8628	0.113	0.118	-0.338	-0.333
C18H18	18	23.0351	22.6851	22.9474	0.088	0.092	-0.262	-0.258
C22H22	22	28.1067	27.8206	28.0351	0.072	0.075	-0.214	-0.211
C26H26	26	33.1849	32.9430	33.1244	0.061	0.063	-0.181	-0.179
C30H30	30	38.2671	38.0575	38.2146	0.053	0.055	-0.157	-0.155
Odd ring size								
cyclopropenyl	3	3.00000	3.00000	3.4641	-0.464		-0.464	
triafulvene	4	4.96239	4.96239	4.8994	0.0630		0.0630	
[3]radialene	6	7.30060	7.30060	7.2916	0.00900		0.00900	
vinylcyclopropenyl	5	5.88950	5.88950	6.0005	-0.111		-0.111	
C3H(CH2)2	5	5.84160	5.84160	5.8186	0.0230		0.0230	

C3H(CH2)(CHCH2)	6	7.41600	7.41600	7.3710	0.0450		0.0450	
C3H2(CHCHCH2)	6	7.54920	7.54920	7.4462	0.103		0.103	
C3H2(C(CH2)2)	6	7.19170	7.19170	6.7207	0.471		0.471	
C3H2(CH)3CH2	7	8.57610	8.57610	8.5652	0.0109		0.0109	
cyclopentadienyl	5	5.85410	5.85410	6.1554	-0.301		-0.301	
pentafulvene	6	7.46590	7.46590	7.4459	0.0200		0.0200	
[5]radialene	10	12.1602	12.1602	12.1602	0.00		0.00	
vinylcyclopentadienyl	7	8.4967	8.4967	8.6467	-0.150		-0.150	
1,2-C5H3(CH2)2	7	8.42860	8.42860	8.42430	0.00430		0.00430	
1,3-C5H3(CH2)2	7	8.31840	8.31840	8.31285	0.00555		0.00555	
cycloheptahexenyl	7	8.54290	8.54290	8.76255	-0.220		-0.220	
[7]radialene	14	17.0241	17.0241	17.0241	-6.50e-07		-6.50e-07	
heptafulvene	8.0	9.99440	9.99440	9.98540	0.00900		0.00900	
cyclononaoctenyl	9.0	11.1702	11.1702	11.3426	-0.172		-0.172	
[9]radialene	18	21.8881	21.8881	21.8881	-3.30e-07		-3.30e-07	
nonafulvene	10	12.5305	12.5305	12.5255	0.00500		0.00500	
Even ring size, at least one odd-type substituent						E^{ac}(eq.13b)		E^{ac}(eq.13b)
tetrafulvene	5	5.59590	6.29250	5.99990	-0.404	-0.404	0.293	0.293
[4]radialene	8	9.65690	9.79800	9.72890	-0.072	-0.073	0.069	0.068
Cb-(CH)4CH2	9	10.6509	11.5910	11.2396	-0.589	-0.588	0.351	0.352
Cb-CHC(CH2)2	8	8.85730	9.65690	9.33535	-0.478	-0.477	0.322	0.322
Cb-C(CHCH2)2	9	10.5835	11.5490	11.1899	-0.606	-0.609	0.359	0.356
Cb-(CH)2CH2	7	8.11990	8.98380	8.64705	-0.527	-0.526	0.337	0.338
1,2-C4H2(CH2)2	6	7.20780	7.51750	7.37080	-0.163	-0.165	0.147	0.144
1,3-C4H2(CH2)2	6	6.47210	6.92820	6.72010	-0.248	-0.251	0.208	0.205
1,2-C4H2(CH2)(CHCH2)	7	8.20780	8.76260	8.51925	-0.311	-0.311	0.243	0.244
1,2-C4H2(CH=C(CH2)2)2	12	13.7266	14.1165	13.9357	-0.209	-0.212	0.181	0.178
Cb-(CH)6CH2	11	13.1871	14.1710	13.8130	-0.626	-0.625	0.358	0.359
hexafulvene	7	8.72060	8.36310	8.56519	0.155	0.156	-0.202	-0.202
[6]radialene	12	14.6011	14.5830	14.5920	0.009	0.009	-0.009	-0.009
Ph-(CH)2CH2	9	11.3850	10.9100	11.1927	0.192	0.192	-0.283	-0.283
Ph-C(CHCH2)2	11	13.9362	13.3889	13.7253	0.211	0.210	-0.336	-0.338
Ph-CHC(CH2)2	10	12.0668	11.6392	11.8884	0.178	0.179	-0.249	-0.249
Ph-(CH)4CH2	11	13.9834	13.4493	13.7769	0.206	0.207	-0.328	-0.327
Ph-(CH)10CH2	17	21.6855	21.0737	21.4653	0.220	0.221	-0.392	-0.391
1,2-C6H4(CH2)2	8	9.95400	9.83130	9.89500	0.059	0.059	-0.064	-0.064
1,3-C6H4(CH2)2	8	9.43110	9.22630	9.33535	0.096	0.096	-0.109	-0.109
1,4-C6H4(CH2)2	8	9.92480	9.79800	9.86380	0.061	0.061	-0.066	-0.066
1,2-C6H4(CH2)(CHCH2)	9	11.2036	10.9167	11.0749	0.129	0.130	-0.158	-0.157

octafulvene	9	11.0035	11.2263	11.1271	-0.124	-0.117	0.0992	0.106
[8]radialene	16	19.4548	19.4574	19.4561	-0.001	-0.001	0.001	0.001
1,2-C8H6(CH=C(CH2)2)2	16	18.9524	19.0444	19.0001	-0.048	-0.0470	0.044	0.045
decafulvene	11	13.7549	13.6012	13.6853	0.070	0.073	-0.084	-0.080
[10]radialene	20	24.3203	24.3199	24.3202	0.000	0.000	-0.000	-0.000
Ionic species								
(not included in Figure 5)								
C3H3+	2	4.00000	2.00000	3.46410	0.536		-1.46	
C5H5-	6	6.47210	5.23610	6.15535	0.317		-0.919	
C7H7+	6	8.98790	8.09780	8.76255	0.225		-0.665	
C3H3-	4	2.00000	4.00000	3.46410	-1.464		0.536	
C5H5+	4	5.23610	6.47210	6.15535	-0.919		0.317	
C7H7-	8	8.09780	8.98790	8.76255	-0.665		0.225	
triafulvene+	3	4.65130	3.96240	4.38135	0.270		-0.419	
triafulvene-	5	3.96240	4.65130	4.38135	-0.419		0.270	
tetrafulvene+	4	5.59590	6.29250	6.00000	-0.404		0.292	
tetrafulvene-	6	5.59590	6.29250	6.00000	-0.404		0.292	
[C4H3C(CH2)2]+	6	7.30060	8.82840	8.42430	-1.124		0.404	
[C4H3C(CH2)2]-	8	7.30060	8.82840	8.42430	-1.124		0.404	

4. Calculation of the topological resonance energy of *carbo*-cyclobutadiene

Following the same principles as those set out for the *carbo*-cyclopropenylide anion (see Figure 6 in the main text), the graph G^0 of *carbo*-cyclobutadiene $C_{12}H_4$ is considered as a "pentacycle" whose primitive ring components are any one of the C_{12} macrocycles and the four C_2 components of the isolated *sp*-*sp* bonds. The molecular graph thus contains $2^5 = 32$ generalized circuits (among which $2^4 = 16$ equivalent C_{12} simple circuits), and thus possesses 32 possibly equivalent generalized versions, 31 of them being of the Möbius type. For comparative purpose, one focusses here on the partial TRE for the 16 C_{12} macrocycles (Figure 7a).

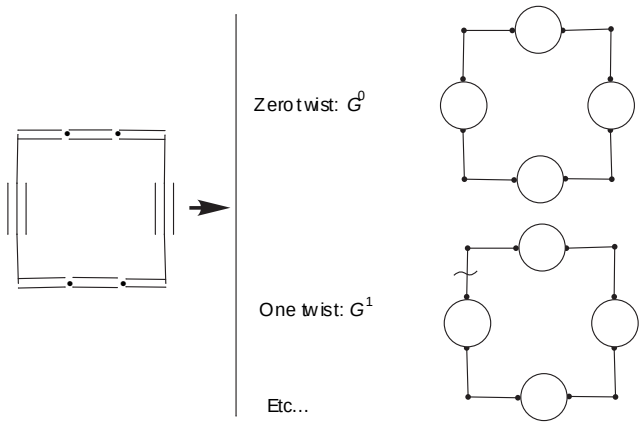

Figure 7a. The first Hückel and Möbius types of the 32 generalized graphs of *carbo*-cyclobutadiene ($C_{12}H_4$).

By analogy with the treatment of the *carbo*-cyclopropenylide anion, the bond resonance energy bRE_{pq} for any of the *sp*-*sp*^{2} bonds is equal to the partial TRE for the 16 C_{12} macrocycles which are indeed of Möbius type when one of the *sp*-*sp*^{2} bonds is twisted, namely in the Möbius graph G^1 (Figure 7). From the characteristic polynomials of G^0 and G^1, the corresponding partially acyclic polynomial is generated by application of (eq. 14a):

$$P^0(x) = x^{12} - 24\,x^{10} - 216\,x^8 - 880\,x^6 + 1488\,x^6 - 576\,x^2$$

$$P^1(x) = x^{12} - 24\,x^{10} - 216\,x^8 - 880\,x^6 + 1488\,x^6 - 576\,x^2 + 64$$

$$P^{ac'}(x) = 1/2\,[P^0(x) + P^1(x)] = x^{12} - 24\,x^{10} - 216\,x^8 - 880\,x^6 + 1488\,x^6 - 576\,x^2 + 32$$

The ground state energies of the corresponding structures are calculated by weighting the highest roots of $P^0(x)$ and $P^{ac'}(x)$ (i.e. the lowest energy levels) by the 12 π_z electrons:

$$E^0(C_{12}H_4) = 20.7262$$

$$E^{ac}(C_{12}H_4) = 21.1263$$

Finally, application of (eq. 7) affords:

$$TRE\ (C_{12}H_4) = -\,0.4001$$

For comparative purposes, the TRE values of the unicyclic [12]annulene and cyclobutadiene parents are [22]:

$$TRE(C_{12}H_{12}) = 4\,[\cos(\pi/12) - \cos(\pi/24]/\sin(\pi/12) = -0.3944$$

$$TRE(C_4H_4) = 4\,[\cos(\pi/4) - \cos(\pi/8]/\sin(\pi/4) = -1.2263$$

Carbo-cyclobutadiene is therefore very slightly more antiaromatic than the [12]annulene parent, and three times less antiaromatic than the cyclobutadiene parent. These variations are basically identical to those observed for the aromaticity of the *carbo*-cyclopropenylide anion.

5. Calculation of the topological resonance energy of the *carbo*-cyclopentadienylium cation

The graph G^0 of $[C_{15}H_5]^+$ is considered as a "hexacycle" whose primitive ring components are any one of the C_{15} macrocycles and the five C_2 components of the isolated *sp-sp* bonds. The molecular graph thus contains $2^6 = 64$ generalized circuits (among which $2^5 = 32$ equivalent C_{15} simple circuits), and thus possesses 64 possibly equivalent generalized versions, 63 of them being of the Möbius type. For comparative purpose, one focusses here on the partial TRE for the 32 C_{15} macrocycles (Figure 7b).

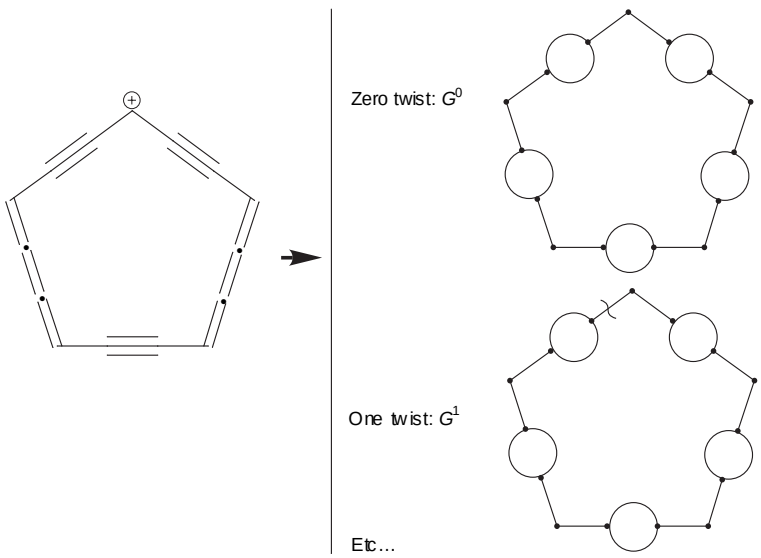

Figure 7b. The first Hückel and Möbius types of the 64 generalized graphs of *carbo*-cyclopentadienylium cation ($C_{15}H_5^+$).

The bond resonance energy bRE_{pq} for any of the *sp-sp*^{2} bonds is equal to the partial TRE for the 32 C_{15} macrocycles, which are indeed of Möbius type when one of the *sp-sp*^{2} bonds is twisted, namely in the Möbius graph G^1 (Figure 8). From the characteristic polynomials of G^0 and G^1, the corresponding partially acyclic polynomial is generated by application of (eq. 14a):

$$P^0(x) = x^{15} - 30\,x^{13} + 360\,x^{11} - 2180\,x^9 + 6840\,x^7 - 9936\,x^5 + 4400\,x^3 - 480\,x - 64$$

$$P^1(x) = x^{15} - 30\,x^{13} + 360\,x^{11} - 2180\,x^9 + 6840\,x^7 - 9936\,x^5 + 4400\,x^3 - 480\,x + 64$$

$$P^{ac'}(x) = 1/2\,[P^0(x) + P^1(x)] = x^{15} - 30\,x^{13} + 360\,x^{11} - 2180\,x^9 + 6840\,x^7 - 9936\,x^5 + 4400\,x^3 - 480x$$

The ground state energies of the corresponding structures are calculated by weighting the highest roots of $P^0(x)$ and $P^{ac'}(x)$ (i.e. the lowest energy levels) by the 14 π_z electrons:

$$E^0(C_{15}H_5^+) = 26.3879$$

$$E^{ac}(C_{15}H_5^+) = 26.2827$$

Finally, application of (eq. 7) affords:

$$\text{TRE}\ (C_{15}H_5^+) = 0.1052$$

For comparative purposes, the TRE values of the unicyclic [15]annulenium and cyclopentadienide parents are [22]:

$$\text{TRE}(C_{15}H_{15}^+) = 2[1 - \cos(\pi/30)]/\sin(\pi/30) = 0.1048$$

$$\text{TRE}(C_5H_5^-) = 2[1 - \cos(\pi/10)]/\sin(\pi/10) = 0.3168$$

The *carbo*-cyclopentadienylium cation is therefore very slightly more aromatic than the [15]annulenium parent, and three times less aromatic than the cyclopentadienylide parent. These variations are basically identical to those observed for the aromaticity of the *carbo*-cyclopropenylide anion and the antiaromaticity of *carbo*-cyclobutadiene.

6. Calculation of the topological resonance energy of *carbo*-benzene

The graph G^0 of the aromatic *carbo*-benzene $C_{18}H_6$ is considered as a "heptacycle" whose primitive ring components are any one of the C_{18} macrocycles and the six C_2 components of the *sp*-*sp* bonds. The molecular graph thus contains $2^7 = 128$ generalized circuits (among which $2^6 = 64$ equivalent C_{18} simple circuits), and thus possesses 128 possibly equivalent generalized versions, 127 of them being of Möbius type. For comparative purpose, one focusses here on the partial TRE for the 64 C_{18} macrocycles (Figure 8).

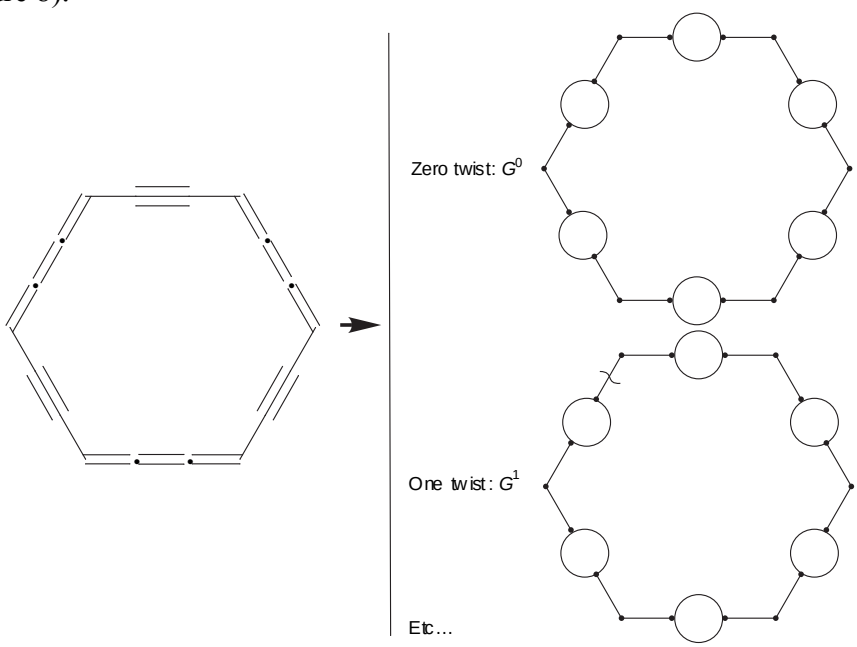

Figure 8. The first Hückel and Möbius types of the 128 generalized graphs of *carbo*-benzene.

The bond resonance energy bRE_{pq} for any of the *sp*-sp^2 bonds is equal to the partial TRE for the 64 C_{18} macrocycles, which are indeed of Möbius type when one of the *sp*-sp^2 bonds is twisted, namely in the Möbius graph G^1 (Figure 8). From the characteristic polynomials of G^0 and G^1, the corresponding partially acyclic polynomial is generated by application of (eq. 14a):

$P^0(x) = x^{18} - 36\,x^{16} + 540\,x^{14} - 4344\,x^{12} + 20016\,x^{10} - 51840\,x^8 + 67536\,x^6 - 32832\,x^4 + 5184\,x^2 - 256$

$P^1(x) = x^{18} - 36\,x^{16} + 540\,x^{14} - 4344\,x^{12} + 20016\,x^{10} - 51840\,x^8 + 67536\,x^6 - 32832\,x^4 + 5184\,x^2$

$P^{ac'}(x) = 1/2\,[P^0(x) + P^1(x)]$

$= x^{18} - 36x^{16} + 540\,x^{14} - 4344\,x^{12} + 20016\,x^{10} - 51840\,x^8 + 67536\,x^6 - 32832\,x^4 + 5184\,x^2 - 128.$

The same polynomial can be generated by applying the Gutman's definition, namely by removing the contributions of the $2^6 = 64$ C_{18} equivalent rings from $P^0(x)$ ($0 \le k < 18 \Rightarrow a^{ac'}_k = a^0_k$, and $a^{ac'}_{18} = a^0_{18} - 64\,(-1)^1 2^1 = -256 + 128 = -128$).

The ground state energies of the corresponding structures are calculated by weighting the highest roots of $P^0(x)$ and $P^{ac'}(x)$ (i.e. the lowest energy levels) by the 18 π_z electrons:

$$E^0(C_{18}H_6) = 31.74163$$

$$E^{ac'}(C_{18}H_6) = 31.65257$$

Finally, application of (eq. 7) affords:

$$\mathrm{TRE}\,(C_{18}H_6) = 0.08906$$

For comparative purposes, the TRE values of the unicyclic [18]annulene and benzene parents are [22]:

$$\mathrm{TRE}(C_{18}H_{18}) = 4[1 - \cos(\pi/36)]/\sin(\pi/18) = 0.08765$$

$$\mathrm{TRE}(C_6H_6) = 4[1 - \cos(\pi/12)]/\sin(\pi/6) = 0.27259$$

Carbo-benzene is therefore very slightly more aromatic than the [18]annulene parent, and three times less aromatic than the benzene parent. These variations are basically identical to those observed for the aromaticity of the *carbo*-cyclopropenylide anion and *carbo*-cyclopentadienylium cation, and for the antiaromaticity of singlet *carbo*-cyclobutadiene.