Pure Appl. Chem., Vol. 80, No. 8, pp. 1859–1871, 2008.
doi:10.1351/pac200880081859

1,3,2-Oxathiaphospholane approach to the synthesis of P-chiral stereodefined analogs of oligonucleotides and biologically relevant nucleoside polyphosphates*

Barbara Nawrot, Beata Rębowska, Olga Michalak, Marek Bulkowski, Damian Błaziak, Piotr Guga, and Wojciech J. Stec‡

Department of Bioorganic Chemistry, Center of Molecular and Macromolecular Studies, Polish Academy of Sciences, Sienkiewicza 112, 90-363 Lodz, Poland

Abstract: Among the various classes of modified nucleotides and oligonucleotides, phosphorothioate analogs, in which the sugar-phosphate backbone is modified by the substitution of a sulfur atom for one of the nonbridging oxygen atoms, have been most extensively studied in both in vitro and in vivo experiments. However, this substitution induces P-chirality of the dinucleoside phosphorothioate moiety. Consequently, even short phosphorothioate oligonucleotides synthesized using standard chemical methods exist as mixtures of many diastereoisomers. In our laboratory, the oxathiaphospholane (OTP) method has been developed for a stereocontrolled synthesis of oligo(deoxyribonucleoside phosphorothioate)s. Recently, this approach has been extended to ribonucleoside derivatives, and stereodefined phosphorothioate diribonucleotides were incorporated into oligomers suitable for mechanistic studies on deoxyribozymes. Next, it was found that the OTP ring can be opened with nucleophiles as weak as the phosphate or pyrophosphate anion, giving rise to nucleoside α-thiopolyphosphates. Surprisingly, the reaction between nucleoside OTP and *O*,*O*-dialkyl H-phosphonate or *O*,*O*-dialkyl H-phosphonothioate led to nucleoside 5'-*O*-(α-thio-β-*O*,*O*-dialkyl-hypophosphate) or 5'-*O*-(α,β-dithio-β-*O*,*O*-dialkyl-hypophosphate), respectively, i.e., derivatives containing a direct P–P bond.

Keywords: deoxyribozyme; PS-DNA; PS-RNA; nucleoside polyphosphates; hypophosphates.

INTRODUCTION

Synthetic oligonucleotides have served as useful tools for probing the functions of nucleic acids and other biomolecules for almost 30 years. In one important area, the oligonucleotides are expected to stop, or at least reduce, the expression of selected genes using either of two approaches based on sequence-specific targeting of nucleic acids [1]. In the so-called "antisense strategy", the inhibition of translation was expected to occur by the introduction of a synthetic oligonucleotide, which results in the formation of an oligonucleotide-mRNA duplex and the activation of RNase H to hydrolyze the messenger RNA [2–4]. In another approach, the antigene strategy, a double-stranded DNA sequence is targeted to be rec-

*Paper based on a presentation at CHEM-BIO-TECH-2007, a joint meeting of the IUPAC 1st Symposium on Chemical Biotechnology (ISCB-1) and the 8th Symposium on Bioorganic Chemistry (ISBOC-8), 8–11 August 2007, Turin, Italy. Other presentations are published in this issue, pp. 1773–1882.

‡Corresponding author: Tel.: +48-42-6816970; Fax: +48-42-6815483; E-mail: wjstec@bio.cbmm.lodz.pl

ognized by an oligonucleotide probe, which binds to form a triplex [5–7]. Unfortunately, neither of these options has yet worked out as well as intended. More recently, new expectations have arisen from the development of oligonucleotides with novel modes of action, such as natural and synthetic ribozymes, and their chemically modified analogs, which are capable of sequence-specific cleavage of a target RNA [8,9]. While ribozymes consisting of RNA are present in nature, the only DNA molecules that hitherto display catalytic activity are those of the synthetic origin [10]. New hopes for the sequence-specific control of gene expression have emerged from the discovery of *RNA interference* (RNAi) [11] in combination with the use of *short interfering RNA* duplexes (*siRNA*). One can be sure that the list of possible mechanisms for gene expression modulation is still incomplete and will be extended by future generations of chemists and molecular biologists.

Nucleoside 5'-*O*-phosphates (NMPs, Fig. 1), diphosphates (NDPs), and triphosphates (NTPs), as well as their 5',5'-dinucleoside polyphosphate analogs (like $N_{Pn}N$, n = 2–7), play an important role in a living cell, serving as a source of energy or as regulatory factors in many metabolic processes. Some notable examples of the involvement of NTPs in eukaryotic systems are apparent in developmental control [12], signal transduction [13], and tumor metastasis [14]. NTPs have found wide application in biochemistry and molecular biology as substrates for the in vitro enzymatic synthesis of DNA and RNA. Natural and modified NTPs have also been used in DNA sequencing and directed mutagenesis. Ribonucleoside 5'-*O*-diphosphates are, for example, the substrates for the synthesis of the corresponding triphosphates, but also for ribonucleoside reductase, the enzyme responsible for maintaining the level of DNA in the cell [15]. Dinucleoside polyphosphates (mostly diadenosine derivatives) are important extracellular mediators affecting vascular tone, the growth of vascular cells [16], and platelet aggregation [17]. Diadenosine tri- and tetraphosphate ($A_{P3}A$, $A_{P4}A$) were the first diadenosine polyphosphates identified in human platelets [18,19], followed by diadenosine penta-, hexa-, and heptaphosphate [20,21].

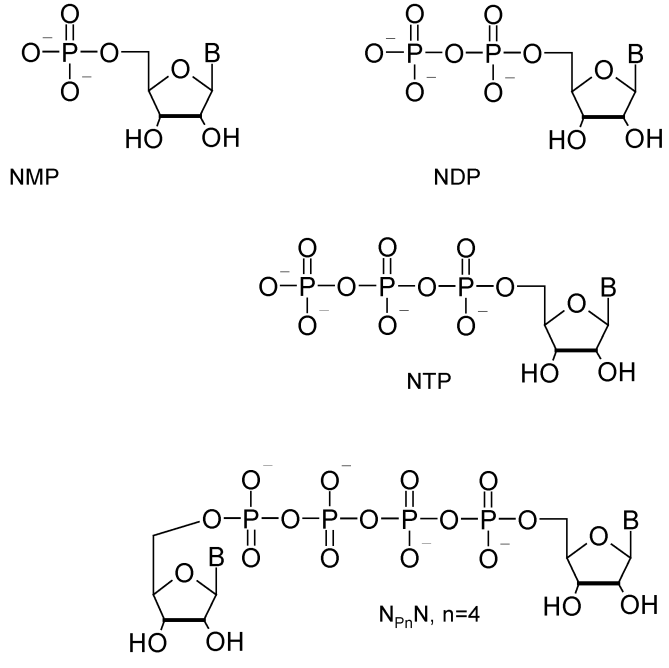

Fig. 1 Ribonucleoside 5'-*O*-phosphates (NMPs), diphosphates (NDPs), triphosphates (NTPs), and 5',5'-dinucleoside polyphosphates ($N_{Pn}N$, n = 2–7); B = Ade, Cyt, Gua, Ura.

All natural nucleoside phosphates, as well as non-modified oligonucleotides, are readily metabolized in the cell, therefore, more stable analogs are necessary for detailed studies on their mechanism of action. For that purpose, numerous analogs with modifications within the nucleobase, ribose, deoxyribose, and phosphate moieties have been obtained [22,23]. Among these, the phosphorothioate nucleotides/oligonucleotides, in which one of the non-bridging phosphate oxygen atoms was substituted with a sulfur atom, were the most extensively studied, both in in vitro and in vivo experiments [3,24]. Additionally, the recent discovery of phosphorothioation of DNA in bacteria has greatly increased interest in phosphorothioates [25]. It should be noted that, although the phosphorothioate group is isoelectronic with the natural phosphate moiety, the modification introduces important changes, mostly due to the sulfur atom's different steric requirements, different affinity toward metal ions, altered negative charge distribution, and altered hydration pattern. It is important to note that phosphorothioate oligonucleotides as well as the phosphorothioate analogs of nucleoside diphosphates (NDPαS, Fig. 2) and triphosphates (NTPαS), with the non-bridging sulfur atom introduced into the 5' phosphate group, are P-chiral species, while nucleoside 5'-*O*-phosphorothioates (NMPS) and the symmetrical 5',5'-$N_{PS}N$ are P-prochiral. When chemically synthesized by standard phosphoramidite or H-phosphonate methods, the resulting P-chiral species consist of a practically equimolar mixture of P-diastereomers of either R_P or S_P absolute configuration. Since proteins are always chiral and they exist in a single stereochemical form, each P-diastereomer of oligonucleotide may interact with them in a different way. Therefore, the stereochemistry of P-chiral compounds should be taken into consideration during the analysis of their biological activity, as well as during the design of new, more potent compounds. Additionally, P-chiral DNA or RNA oligonucleotide probes are used in mechanistic studies to answer questions about their mechanism of action and their interactions with other nucleic acids or proteins. The field has been covered by several reviews [26–28], but there is an unlimited potential for new findings.

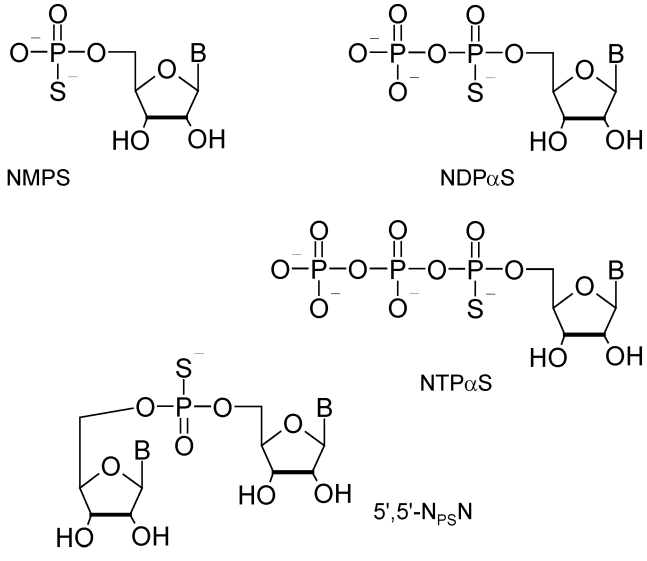

Fig. 2 Phosphorothioate analogs of nucleoside 5'-*O*-phosphates ($NMP^{-\bullet}$), diphosphates (NDPaS), triphosphates (NTPaS), and symmetrical 5',5'-dinucleoside phosphates (5',5'-$N_{PS}N$).

Oligo(nucleoside phosphorothioate)s (PS-DNA) can be routinely obtained in the form of pure P-diastereomers by enzymatic synthesis, but to date, known DNA polymerases synthesize only PS-DNAs of the R_P absolute configuration. Using a theoretically more flexible, nonenzymatic approach, diastereomeric mixtures of short PS-DNA can be separated into diastereomeric species by means of chromatographic techniques [29]. However, the efficiency of this process strongly depends upon the sequence of nucleobases and chromatographic conditions and only a few trimers, tetramers, and pentamers have been separated into individual diastereomers using this technique [30–32]. Thus, both enzymatic and chromatographic methods suffer from severe limitations. In this laboratory, the oxathiaphospholane (OTP) method for the stereocontrolled synthesis of PS-DNA, employing chromatographically separated, diastereomerically pure 5'-*O*-DMT-nucleoside-3'-*O*-(2-thio-1,3,2-OTP) monomers and 1,4-diazabicyclo[5.4.0]undec-7-ene (DBU) as an activator, has been developed (Scheme 1, DMT = 4, 4'-dimethoxytrityl) [33–35]. The OTP method has allowed for the synthesis of many stereodefined PS-oligonucleotides, which have been used in antisense studies [36,37] as a probe of the stereochemical outcome of DNA cleavage reactions [38,39], in investigations of the transition between the B (right-handed) and Z (left-handed) conformations of DNA [40], and in the determination of metal ion binding sites within a DNA molecule [41]. For many years, it was assumed that phosphorothioate modification represented a very conservative replacement for the phosphate (the sulfur atom is only slightly larger than the oxygen atom and the P–S bond is only 0.3 Å longer than the P–O bond) [42]. However, while these changes seem intuitively small, they are able to confer quite unique properties to complexes of homopurine (All-R_P-PS)-DNA with RNA templates, as demonstrated by the unexpectedly high thermal stability of parallel triplexes [43] and parallel duplexes [44].

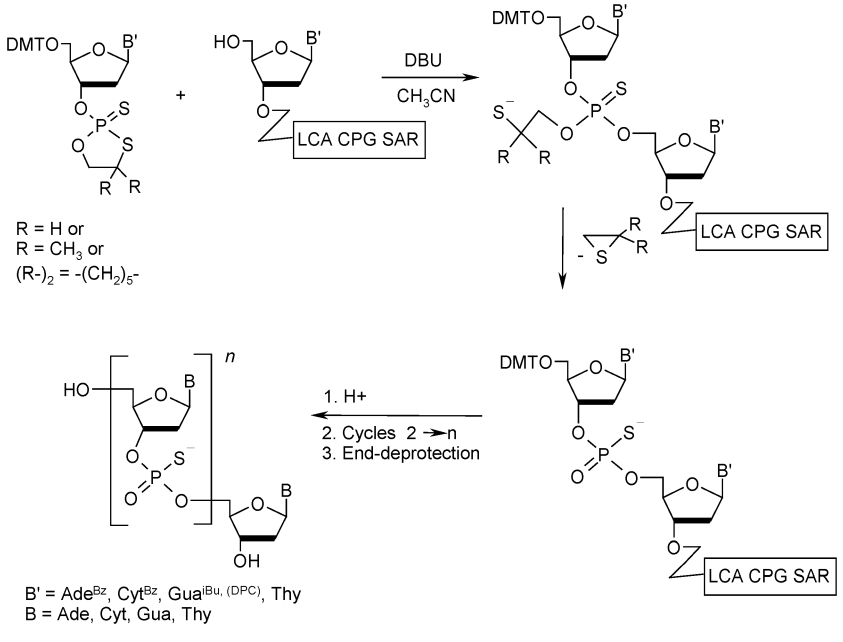

Scheme 1 DMT = dimethoxytrityl; B' = Thy or N-protected nucleobases, Bz = benzoyl, iBu = isobutyryl, DPC = diphenylcarbamoyl; B = unprotected nucleobases: Ade, Cyt, Gua, or Thy; LCA CPG SAR = long-chain alkylamino controlled pore glass, with the DBU-resistant sarcosinyl linker.

The OTP approach has been mostly used for the stereocontrolled synthesis of PS-DNA, but this method has also been effectively applied to other tasks. Several years ago, locked nucleic acids (LNAs), defined as oligonucleotides containing one or more 2'-*O*-4'-*C*-methylene-β-D-ribofuranosyl nucleotide

monomer(s), were introduced as a new class of conformationally restricted oligonucleotide analogs [45]. We then turned our attention to their phosphorothioate derivatives and, in collaboration with Prof. Wengel's group, synthesized diastereomerically pure LNA dinucleoside phosphorothioates [46]. Despite the much higher steric hindrance in LNA derivatives and RNA-like 3'-endo sugar puckering, the ring-opening condensation reaction proceeds in CH_3CN solution in high yield and with 96+ % stereoselectivity. Only one of the diastereomers of LNA dinucleoside phosphorothioate (presumably that of R_P-absolute configuration) was found to be readily digested by svPDE.

Another variant of this methodology produced stereodefined nucleoside 5'-*O*-phosphoramidothioates (Scheme 2), further used for the determination of stereochemistry of rHint1 hydrolase assisted cleavage of the P–N bond in adenosine-5'-*O*-(*N*-tryptophanylamide)phosphoramidothioate [47]. It should be pointed out that to date, mostly because of the much more difficult chemistry, no general stereoselective method for the chemical synthesis of stereodefined PS-oligo*ribo*nucleotides has been published. The next section shows our preliminary results to address that challenge, within a project aimed at a better understanding of the functioning of the deoxyribozyme 10-23.

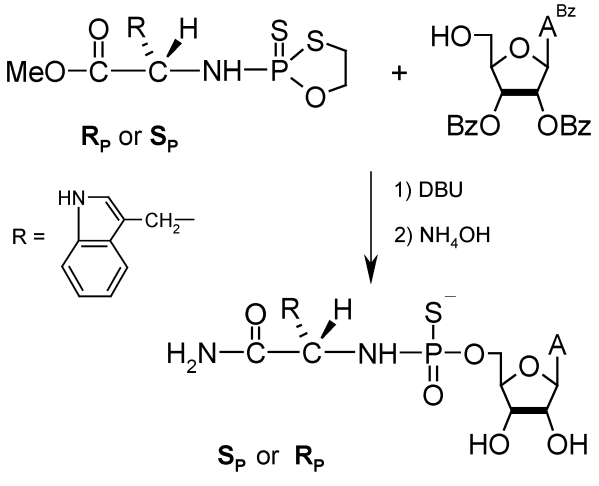

Scheme 2

STEREODEFINED RNA DINUCLEOTIDE PHOSPHOROTHIOATES

RNA and DNA enzymes are metalloenzymes that require a divalent metal cation as a cofactor for the site-specific cleavage of the phosphodiester linkage. In this field, some previous studies (based on measurement of the thio- and rescue-effects) were focused on the identification of catalytically important phosphates within the catalytic core of the nucleic acids enzymes [41,48]. To further investigate the importance of these phosphates, we synthesized "chimeric" PS/PO oligodeoxyribonucleotides containing in preselected positions the PS-stereodefined deoxyribonucleotides. The synthesis was carried out via the phosphoramidite approach (Scheme 3), and employed at appropriate steps the 3'-*O*-phosphoramidite derivatives of suitably protected diastereomerically pure dinucleoside phosphorothioate triesters (**7**, Z = H, R = *o*-nitrobenzyl) [49]. S-Alkylation of **5** is necessary to protect the internucleotide phosphorothioate diester bond against PS → PO exchange during the standard oxidation procedure within the phosphoramidite synthetic protocol. The corresponding precursors **4** of either the S_P or the R_P configuration were obtained by the OTP method starting from diastereomerically pure deoxyribonucleoside monomers **2** (Z = H).

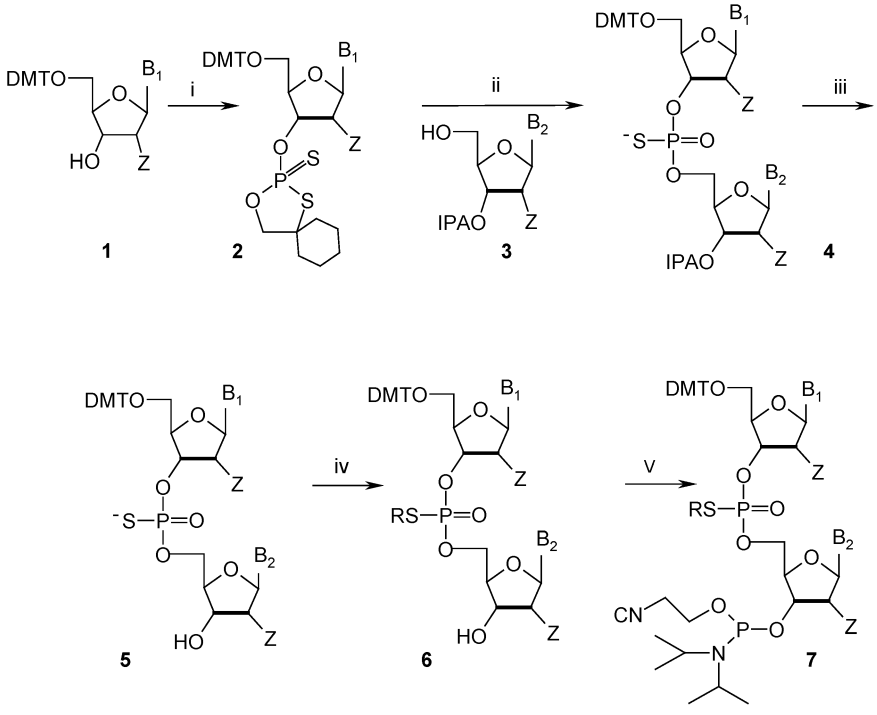

Scheme 3 The synthesis of phosphoramidite derivatives of dinucleoside phosphorothioates containing a P-stereodefined phosphorothioate internucleotide linkage. (i) (a) *N*,*N*-diisopropylamino-4,4-pentamethylene-1,3,2-OTP/2-ethylthio-1*H*-tetrazole, (b) S_8, (c) separation of P-diastereomers; (ii) DBU, CH_3CN; (iii) 28 % $NH_4OH_{(aq)}$:dioxane (1:2); (iv) *o*-nitrobenzyl bromide, NEt_3, CH_3CN; (v) *O*-2-cyanoethyl-*N*,*N*,*N'*,*N'*-tetraisopropylamidophosphite/2-ethylthio-1*H*-tetrazole, CH_3CN.

Keeping in mind a literature report that the deoxyribozyme 10-23 hydrolyzes "chimeric" DNA/RNA oligonucleotides in a similar manner as short RNA substrates [50], we found it interesting to use the phosphorothioate modification to elucidate the role of the non-bridging oxygen atoms at the scissile site of the substrate in the activity of the deoxyribozyme (Scheme 4).

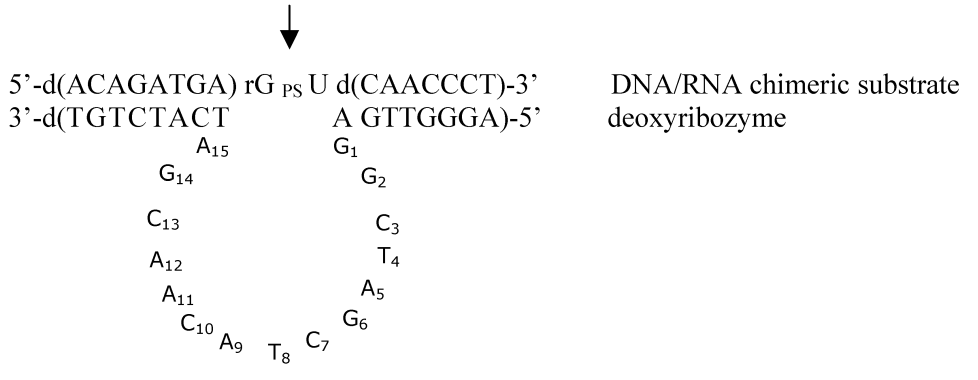

Scheme 4 The complex of deoxyribozyme 10-23 and its chimeric DNA/PS-RNA substrate. The arrow indicates the cleavage site.

Thus, we tried to apply the above outlined methodology to the synthesis of chimeric DNA/RNA oligonucleotides possessing stereodefined phosphorothioate internucleotide linkage between ribonucleoside units. In our first attempt (Scheme 3), the diastereomerically pure OTP monomers **2a,b** were obtained via the reaction of 2'-*O*-*t*-butyldimethylsilyl (TBDMS) derivative of *N*-protected-5'-*O*-DMT-*ribo*nucleosides **1a**,**b** (Z = *O*-TBDMS, **1a**: $B_1 = A^{Bz}$, **1b**: $B_1 = G^{iBu,DPC}$) with *N*,*N*-diisopropylamino-4,4-pentamethylene-1,3,2-OTP in the presence of 1*H*-tetrazole, followed by in situ sulfurization and separation of the P-diastereoisomers by silica gel chromatography. Diastereomerically pure monomers **2** were stereospecifically condensed with suitably protected 5'-OH nucleosides (**3**) and the resulting dinucleoside phosphorothioates **4** were obtained in 50–80 % yield. On the basis of enzymatic digestion of dinucleotides **4**, the *fast*-eluting isomers of **2a** and **2b** were found to be substrates for synthesis of R_P-diastereoisomers of **4**, while the *slow*-eluting isomers of **2a** and **2b** yield their S_P-counterparts [51,52]. The diastereomerically pure dimers **4** were characterized by ^{31}P NMR and fast atom bombardment (FAB) or matrix-assisted laser desorption ionization with time-of-flight mass spectrometry (MALDI-TOF MS) methods. Unfortunately, the removal of isopropoxyacetyl (IPA) group from **4** was accompanied by partial migration of the *t*-butyldimethylsilane (TBDMS) group onto the 3'-OH function in **5**. To separate the mixture of those regioisomers, column chromatography on a silica gel was performed using a chloroform/methanol gradient system. The dimers **5** were then S-alkylated with *o*-nitrobenzyl bromide in the presence of triethylamine. However, in this process also partial 2' → 3' migration of the TBDMS protecting group occurred. Both the 2'-*O*-TBDMS-**6a**,**b** and their 3'-*O*-TBDMS regioisomers could be separated chromatographically, although the desired 2'-*O*-TBDMS regioisomers **6** were isolated in only ca. 20 %. P-Diastereomerically pure forms of dimers **6a**,**b** (mixtures of 2'- and 3'-*O*-TBDMS regioisomers) were phosphitylated with 2-*O*-cyanoethyl-(*N*,*N*,*N*',*N*'-tetraisopropyl)phosphoramidite in the presence of 2-ethylthio-1*H*-tetrazole in acetonitrile. The resulting compounds **7** (both regioisomers, without purification) were used for the synthesis of oligomers **8a** and **8b** (Table 1). The oligonucleotides were synthesized (1 µmol scale) on an Applied Biosystems ABI394 synthesizer according to the supplier's routine protocol except for a prolonged coupling time (up to 120 s) for the modified units **7**. Even with that extended time, the coupling efficiency for **7** was only in the range of 40–50 %, as determined by the DMT cation assay. The oligonucleotides were then treated with 1 M piperidine/acetonitrile solution to remove the 2-cyanoethyl groups from the phosphate functions, followed by a mixture thiophenol/dioxane/triethylamine (2:1:2) to remove the S-protecting group. Cleavage of the oligonucleotides from the solid support and deprotection of nucleobases were performed with a NH_4OH/ethanol (3:1) solution for 16 h at 37 °C. The resulting 5'-*O*-DMT protected oligomers were purified by reversed-phase high-performance liquid chromatography (RP-HPLC), and the DMT group was removed with 50 % aq. acetic acid. The removal of the TBDMS protecting group was achieved by treatment with 1.0 M solution of tetrabutylammonium fluoride (TBAF) in tetrahydrofuran (THF). Finally, the oligomers were isolated by RP-HPLC, desalted, and analyzed by MALDI-TOF MS and by enzymatic digestion. We obtained oligomers **8a** and **8b** of the desired molecular weight, however, due to partial 2' → 3' migration of the *t*-butyldimethylsilyl protecting group, the obtained oligonucleotides were ca. 40 % contaminated with counterparts containing the 2'-5' internucleotide linkage.

Table 1 Characteristics of chimeric PS-oligonucleotides.

Compound	Sequence	RP-HPLC, r.t. [min]		MALDI-TOF MS *m/z*	
		DMT ON	DMT OFF	Calc.	Measd.
8a-R	[R_P]-d(ACAGATG)$\mathbf{A_{PS}G}$d(TCAACCCT)	17.9	19.9	5208	5210
8a-S	[S_P]-d(ACAGATG)$\mathbf{A_{PS}G}$d(TCAACCCT)	19.3	20.0	5208	5210
8b-R	[R_P]-d(ACAGATGA)$\mathbf{G_{PS}U}$d(CAACCCT)	22.9	19.9	5197	5179
8b-S	[S_P]-d(ACAGATGA)$\mathbf{G_{PS}U}$d(CAACCCT)	23.6	19.9	5198	5179
8c-R	F-CUUUCCUCUU$\mathbf{C_{PS}G}$GGUCGGCA	–	8.7	6288	6289
8c-S	S-CUUUCCUCUU$\mathbf{C_{PS}G}$GGUCGGCA	–	8.4	6288	6285

The partial 2' → 3' migration of the *t*-butyldimethylsilyl protecting group, mentioned above, forced us to look for another, more stable protecting group. We were pleased to see that the triisopropylsilyloxymethyl (TOM) group [53] met the requirements. The acetal structure of the TOM group makes it completely stable toward basic and weakly acidic conditions and prevents its migration from 2'-O to 3'-O position. Starting from **1c** (Z = *O*-TOM, B_1 = Cyt^{Bz}), the analogous sequence of reactions depicted in Scheme 3 furnished **7c** (B_2 = $G^{iBu,DPC}$) in diastereomerically pure *fast*- and *slow*-eluting forms, free from regioisomeric impurities involving the migration of the TOM moiety to the 3'-position. They were used in the synthesis of the ribozyme delta whole-RNA substrate analogs **8c-R** and **8c-S**. At the end of synthesis, the DMT group was removed prior to cleavage from the oligomer from the support. After deprotection, the products were precipitated with *n*-butanol, purified by HPLC, desalted, and analyzed by MALDI-TOF MS.

Thus, we have proved that diastereomerically pure OTP-ribonucleoside monomers can be converted by stereospecific condensation into diastereomerically pure diribonucleoside phosphorothioates, which, after protection of the sulfur atom, can be efficiently transformed into the corresponding 2-cyanoethyl phosphoramidites, and be further used for the automated synthesis of oligonucleotides by the phosphoramidite approach. These results are preliminary, and the outlined protocol requires optimization. Nonetheless, we hope that this opens a new field of studies involving the structure and function of RNA oligonucleotides.

OPENING OF THE OTP RING WITH NUCLEOPHILES OTHER THAN ALCOHOLS

In its infancy, the OTP method was used only for synthesis of stereodefined PS-DNA, where the electrophilic phosphorus center of the OTP monomer was attacked by the nucleophilic 5'-OH group of the incoming deoxyribonucleoside. Over the next several years, other nucleophilic reagents such as amines, thiols, and the fluoride anion were tested. Primary and secondary amines, like *n*-butylamine, aniline, or morpholine, are themselves sufficiently nucleophilic to attack phosphorus atom of the 2-alkoxy-2-thio-1,3,2-OTPs without the assistance of DBU, yielding the corresponding *O*-alkyl phosphoramidothioates [54]. *S*-Nucleophiles, like *n*-butyl mercaptane, react with nucleoside OTP monomers, yielding nucleoside *S*-*n*-butyl-phosphorodithioates [55]. In the analogous reaction, triethylamine tris(hydrofluoride), in the presence of DBU, reacts quantitatively, furnishing the phosphorfluoridate derivative. Contrary to all the known examples of 1,3,2-OTP ring-opening condensations, the attack of a fluoride ion on phosphorus is not stereospecific and leads to the mixture of P-diastereomers [56].

Having tested these classes of typical nucleophiles, we decided to use the anions of selected acids as reagents of modest nucleophilicity, in such reactions. The phosphate anion was an obvious first choice, and its reaction with the 5'-OTP derivatives of nucleosides produced the corresponding 5'-*O*-(α-thiodiphosphates) (Scheme 5). Similarly, the inorganic pyrophosphate anion opened the OTP ring, giving rise to 5'-*O*-(α-thiotriphosphates) [57]. The expected products were isolated and characterized, although in moderate yield, under unoptimized conditions.

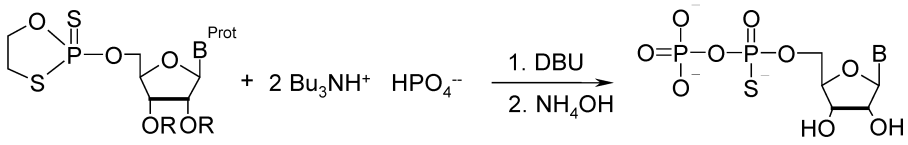

Scheme 5

Another set of nucleophiles consisted of phosphonate anions, such as methylene-bis-phosphonate and benzylphosphonate. The products were isolated on DEAE Sephadex A-25 and LH-20 columns and characterized by means of ^{31}P NMR and MS. The yields for the series of isolated methylene-bis-phosphonate derivatives (unoptimized) are given in Table 2, while the benzylphosphonate product was isolated with a 45 % yield.

Table 2 The yields for the series of isolated methylene-bis-phosphonate derivatives of NMPSs.

Compound	Yield by ^{31}P NMR (%)	Yield of isolated product (%)
β,γ-CH_2-dATPαS	87	24
β,γ-CH_2-dGTPαS	77	25
β,γ-CH_2-dCTPαS	72	17
β,γ-CH_2-TTPαS	73	15
β,γ-CH_2-ATPαS	54	22
β,γ-CH_2-GTPαS	50	25
β,γ-CH_2-CTPαS	64	19
β,γ-CH-UTPαS	43	18

It must be emphasized that all products resulting from the opening of the nucleoside 5'-*O*-(2-thio-1,3,2-OTP) ring by the anions are P-chiral species. They, supposedly, will be obtained in diastereomerically pure forms, provided that the mechanism permits a stereospecific outcome and that diastereomerically pure 5'-*O*-OTP substrates become available. Unfortunately, our efforts in this field clearly indicate that the separation of nucleoside 5'-*O*-(2-thio-4,4-pentamethylene-1,3,2-OTP)s is much more difficult than that of nucleoside 3'-*O*-(2-thio-4,4-pentamethylene-1,3,2-OTP) derivatives, so the experiments presented above were performed with mixtures of isomers. Results obtained recently kindle some hope that for some 5'-OTP substrates possessing certain acyl substituents at 2' and/or 3'-hydroxyl groups, the separation of P-diastereomers is feasible, albeit time-consuming [58].

A NEW METHOD FOR THE SYNTHESIS OF NUCLEOSIDE 5'-*O*-α-THIO- AND α,β-DITHIO-HYPOPHOSPHATES

In 1970, Setondji published a method for the synthesis of adenosine 5'-*O*-hypophosphate [59], an analog of adenosine 5'-*O*-diphosphate that doesn't contain an oxygen bridge between the two phosphorus atoms. That method was based on the use of DCC for condensing 2',3'-protected adenosine and the hypophosphate anion (Scheme 6). The resulting adenosine 5'-*O*-hypophosphate was further examined with enzymatic tests, proving its avidity as a substrate for pyruvate kinase [60]. It is clear that the α-phosphorus atom in this compound is *prochiral*.

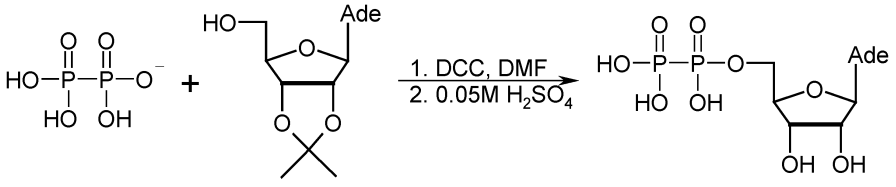

Scheme 6

We came across this pretty old reaction, when, in a recent set of experiments on the DBU-assisted OTP-ring opening condensation of **9** (Scheme 7), we used *O*,*O*-dimethyl H-phosphonate and *O*,*O*-dimethyl H-phosphonothioate. Rather surprisingly, these reactions led to nucleoside 5'-*O*-(α-thio-β-*O*,*O*-dimethyl-hypophosphate) (**10**, Scheme 7) and nucleoside 5'-*O*-(α,β-dithio-β-*O*,*O*-dimethyl-hypophosphate) (**15**, Scheme 8), respectively. Additionally, Scheme 7 shows some further transformations leading to deprotected (**11**,**12**) or oxidized compounds (**13**,**14**). Unexpectedly, a search of the literature did not reveal any further attempts at the synthesis of nucleoside 5'-*O*-hypophosphate or its analogs, besides Sentondji's aforementioned work. The results of our preliminary experiments indicate that the method described here for the formation of the direct P–P bond is fairly general and can be used in the preparation of hypophosphate-congeners of other ribo- and deoxyribonucleoside 5'-*O*-diphosphates with satisfactory yields. Studies involving the mechanism of the P–P bond formation are in progress. Our continued efforts aim at the preparation of these compounds in P-diastereomerically pure forms, provided that diastereomerically pure nucleoside 5'-*O*-OTPs become available.

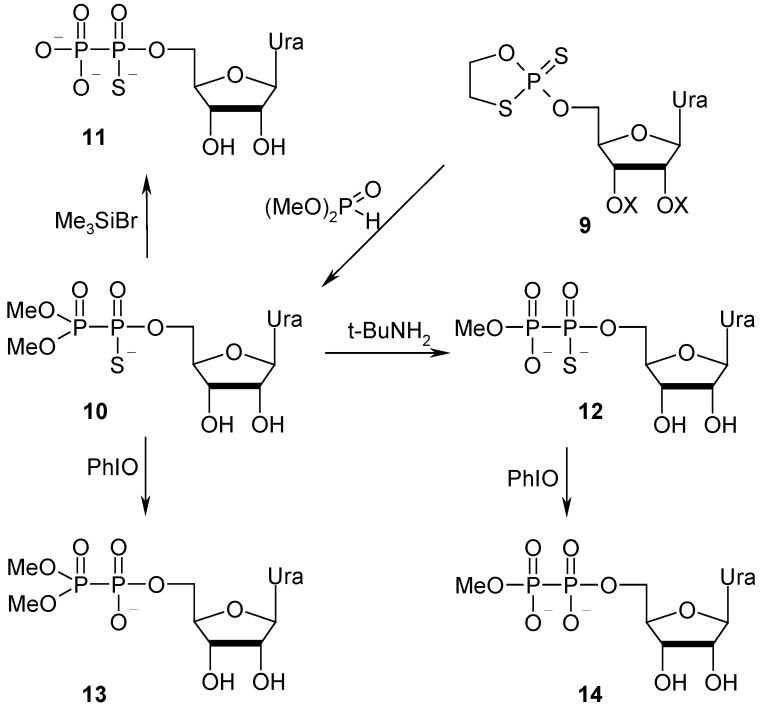

Scheme 7

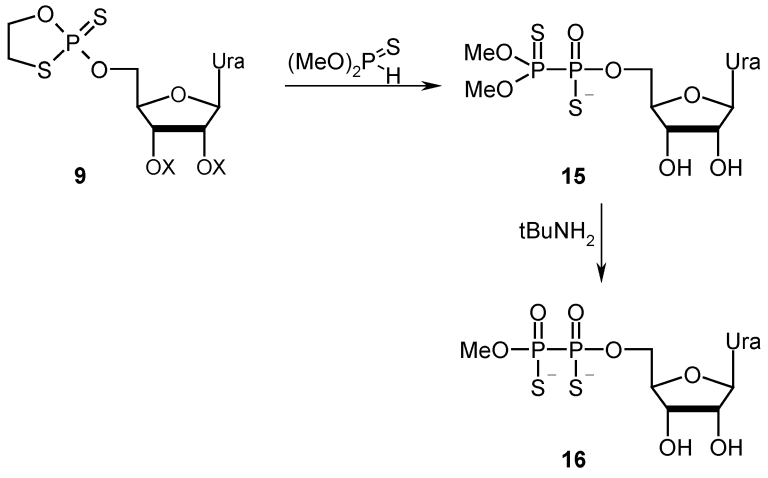

Scheme 8

SUMMARY

Condensation based on the ring opening of 2-substituted-2-thio-1,3,2-OTPs, originally designed as a stereocontrolled method for the synthesis of PS-DNA with a predetermined sense of chirality at the phosphorus atom in each internucleotide phosphorothioate moiety, has been further developed as the method of choice for the synthesis of numerous phosphorothioate and phosphoroselenoate analogs of nucleoside polyphosphates and phosphoramidates. These analogs are useful as molecular tools in the study of polymorphism of nucleic acids, as probes of nucleic acid/protein interactions, and for the elucidation of the mechanism of deoxyribozyme- and enzyme-assisted cleavage of P–O and P–N bonds. Very recently, we have discovered that the OTP ring-opening condensation allows for a new method of P–P bond formation. This new reaction was applied to the synthesis of novel derivatives of nucleosides, namely, nucleoside 5'-*O*-thiohypophosphates that can be converted to the corresponding hypophosphates. These compounds can mimic natural NDPs, but due to the presence of the P–P bond, they will presumably hamper enzymatic phosphate transfer, or, more interestingly, interfere with activity of ribonucleotide reductase, which is indispensable for the control of the pool of deoxyribonucleoside triphosphates and the DNA replication process in every living cell.

ACKNOWLEDGMENTS

This work was supported by statutory funds from the Center of Molecular and Macromolecular Studies, Polish Academy of Sciences, funds from the Polish Ministry of Science and Higher Education (3 T09A 059 28 and 70/E-63/SN-014/2006), and ICGEB grant CRP/POL04-01.

REFERENCES

1. P. C. Zamecnik, M. L. Stephenson. *Proc. Natl. Acad. Sci. USA* **75**, 280 (1978).
2. S. T. Crooke. *Therapeutic Applications of Oligonucleotides*, Springer Verlag, Heidelberg (1995).
3. C. A. Stein, A. M. Kreig (Eds.). *Applied Antisense Oligonucleotide Technology*, John Wiley, NewYork (1998).
4. S. T. Crooke (Ed.). *Handbook of Experimental Pharmacology: Antisense Research and Applications*, **131**, Springer Verlag, Berlin (1998).
5. V. N. Soyfer, V. N. Potaman. *Triple–Helical Nucleic Acids*, Springer Verlag, New York (1996).
6. N. T. Thuong, C. Hélène. *Angew. Chem., Int. Ed. Engl*. **32**, 666 (1993).

7. C. Giovannangeli, C. Hélène. *Antisense Nucleic Acid Drug Dev*. **7**, 413 (1997).
8. J. Rossi. *J. Chem. Biol.* **6**, 33 (1999).
9. A. Michienzi, J. J. Rossi. *Methods Enzymol*. **341**, 581 (2001).
10. R. R. Breaker. *Science* **290**, 2095 (2000).
11. A. Fire, S. Xu, M. K. Montgomery, S. A. Kostas, S. E. Driver, C. C. Mello. *Nature* **391**, 806 (1998).
12. J. Biggs, E. Hersperger, P. S. Steeg, L. A. Liotta, A. Shearn. *Cell* **63**, 933 (1990).
13. A. A. Bominaar, A. C. Molijin, M. Pestel, M. Veron, H. P. J. Van. *EMBO J.* **12**, 2275 (1993).
14. P. S. Steeg, G. Bevilacqua, L. Kopper, U. P. Thorgeirsson, J. E. Talmadge, L. A. Liotta, M. E. Sobel. *J. Natl. Cancer Inst.* **80**, 200 (1988).
15. J. Herrick, B. Sclavi. *Mol. Microbiol.* **63**, 22 (2007).
16. C. H. V. Hoyle, R. H. Hilderman, J. J. Pintor, H. Schlüter, B. F. King. *Drug Develop. Res.* **52**, 260 (2001).
17. J. Lüthje, J. Baringer, A. Ogilvie. *Thromb. Haemost.* **54**, 469 (1985).
18. J. Lüthje, A. Ogilvie. *Biochem. Biophys. Res. Commun.* **115**, 253 (1983).
19. H. Flodgaard, H. Klenow. *Biochem. J.* **208**, 737 (1982).
20. H. Schlüter, E. Offers, G. Brüggemann, M. van der Giet, M. Tepel, E. Nordhoff, M. Karas, C. Spieker, H. Witzel, W. Zidek. *Nature* **367**, 186 (1994).
21. J. Jankowski, M. Tepel, M. van der Giet, I. M. Tente, L. Henning, R. Junker, W. Zidek, H. Schlüter. *J. Biol. Chem.* **274**, 23926 (1999).
22. J. Micklefield. *Curr. Med. Chem.* **8**, 1157 (2001).
23. R. Corradini, S. Sforza, T. Tedeschi, R. Marchelli. *Chirality* **19**, 269 (2007).
24. F. Eckstein. *Antisense Nucleic Acid Drug Develop.* **10**, 117 (2000).
25. L. Wang, S. Chen, T. Xu, K. Taghizadeh, J. S. Wishnok, X. Zhou, D. You, Z. Deng, P. C. Dedon. *Nat. Chem. Biol.* **3**, 709 (2007).
26. F. Eckstein. *Angew. Chem., Int. Ed. Engl.* **22**, 423 (1983).
27. F. Eckstein. *Annu. Rev. Biochem.* **54**, 367 (1985).
28. P. Guga. *Curr. Top. Med. Chem.* **7**, 695 (2007).
29. W. J. Stec, G. Zon. In *Natural Products Chemistry*, R. I. Zalewski, J. J. Skolik (Eds.), pp. 495–509, Elsevier, Amsterdam (1985).
30. M. Koziołkiewicz, B. Uznański, W. J. Stec, G. Zon. *Chem. Scr.* **26**, 251 (1986).
31. A. Murakami, Y. Tamura, H. Wada, K. Makino. *Anal. Biochem*. **233**, 285 (1994).
32. Y. Tamura, L. H. Miyoshi, T. Yokota, K. Makino. *Nucleosides Nucleotides* **17**, 269 (1998).
33. W. J. Stec, A. Grajkowski, B. Karwowski, A. Kobylańska, M. Koziołkiewicz, K. Misiura, A. Okruszek, A. Wilk, P. Guga, M. Boczkowska. *J. Am. Chem. Soc.* **117**, 12019 (1995).
34. W. J. Stec, B. Karwowski, M. Boczkowska, P. Guga, M. Koziołkiewicz, M. Sochacki, M. Wieczorek, J. Błaszczyk. *J. Am. Chem. Soc.* **120**, 7156 (1998).
35. P. Guga, W. J. Stec. In *Current Protocols in Nucleic Acid Chemistry*, S. L. Beaucage, D. E. Bergstrom, G. D. Glick, R. A. Jones (Eds.), pp. 4.17.1–4.17.28, John Wiley, Hoboken, NJ (2003).
36. W. J. Stec, Cz. S. Cierniewski, A. Okruszek, A. Kobylańska, Z. Pawłowska, M. Koziołkiewicz, E. Pluskota, A. Maciaszek, B. Rębowska, M. Stasiak. *Antisense Nucleic Acids Drugs Dev.* **7**, 567 (1997).
37. T. Inagawa, H. Nakashima, B. Karwowski, P. Guga, W. J. Stec, H. Takeuchi, H. Takaku. *FEBS Lett.* **528**, 48 (2002).
38. M. Koziołkiewicz, A. Owczarek, K. Domański, M. Nowak, P. Guga, W. J. Stec. *Bioorg. Med. Chem.* **9**, 2403 (2001).
39. M. Koziołkiewicz, A. Owczarek, M. Wójcik, K. Domański, P. Guga, W. J. Stec. *J. Am. Chem. Soc*. **124**, 4623 (2002).
40. M. Boczkowska, P. Guga, B. Karwowski, A. Maciaszek. *Biochemistry* **39**, 11057 (2000).

41. B. Nawrot, K. Widera, M. Wojcik, B. Rebowska, G. Nowak, W. J. Stec. *FEBS J.* **274**. 1062 (2007).
42. P. A. Frey, R. D. Sammons. *Science* **228**, 541 (1985).
43. P. Guga, M. Boczkowska, M. Janicka, A. Maciaszek, S. Kuberski, W. J. Stec. *Biophys. J.* **92**, 2507 (2007).
44. P. Guga, M. Janicka, A. Maciaszek, B. Rębowska, G. Nowak. *Biophys. J.* **93**, 3567 (2007).
45. J. Wengel. *Acc. Chem. Res*. **32**, 301 (1999).
46. B. Karwowski, A. Okruszek, J. Wengel, W. J. Stec. *Bioorg. Med. Chem. Lett.* **11**, 1001 (2001).
47. A. Krakowiak, R. Kaczmarek, J. Baraniak, M. Wieczorek, W. J. Stec. *J. Chem. Soc. Chem. Commun.* 2163 (2007).
48. R. Knoll, R. Bald, J. P. Furste. *RNA* **3**, 132 (1997).
49. B. Nawrot, B. Rebowska, K. Cieslinska, W. J. Stec. *Tetrahedron Lett.* **46**, 6641 (2005).
50. N. Ota, M. Warashina, K. Hirano, K. Hatanaka, K. Taira. *Nucleic Acids Res.* **26**, 3385 (1998).
51. P. M. J. Burgers, F. Eckstein, D. H. Hunneman. *J. Biol. Chem*. **254**, 7476 (1979).
52. B. V. L. Potter, B. A. Connolly, F. Eckstein. *Biochemistry* **22**, 1369 (1983).
53. S. Pitsch, P. A. Weiss, L. Jenny, A. Stutz, X. Wu. *Helv. Chim. Acta* **84**, 3773 (2001).
54. K. Misiura, K. Domański, D. Korczyński. Unpublished results.
55. K. Misiura. Unpublished results.
56. K. Misiura, D. Szymanowicz, W. J. Stec. *Chem. Commun*. 515 (1998).
57. K. Misiura, D. Szymanowicz, W. J. Stec. *Org. Lett.* **7**, 2217 (2005).
58. Tomaszewska, P. Guga, W. J. Stec. Unpublished results.
59. J. Setondji, P. Remy, G. Dirheimer, J. P. Ebel. *Biochim. Biophys. Acta* **224**, 136 (1970).
60. J. Setondji, P. Remy, G. Dirheimer, J. P. Ebel. *Biochim. Biophys. Acta* **232**, 585 (1971).