Pure Appl. Chem., Vol. 79, No. 11, pp. 2071–2081, 2007.
doi:10.1351/pac200779112071

Diesel fuels from biomass*

Dominique Casanave, Jean-Luc Duplan, and Edouard Freund‡

French Petroleum Institute (IFP), 1 & 4 avenue de Bois Préau, 92500 Rueil-Malmaison, France

Abstract: The demand for transportation fuels—gasoline (for cars), diesel (for trucks and cars), and kerosene (for aircraft)—is predicted to increase. The fastest growth will be observed for kerosene, in competition with diesel, inducing constraints on diesel. At the same time, all of these fuels are derived mainly from oil (more than 95 %), thus generating growing, uncontrolled CO_2 emissions. Therefore, production of diesel derived from biomass (the so-called biodiesel) appears as a major objective. In this paper, we describe the existing industrial processes, discuss the possible improvements, and present the new routes (the "second-generation" processes) under development that will allow biodiesel to gain a significant percentage of the diesel (and maybe of middle distillates) pool.

Keywords: biofuel; biodiesel; biomass; vegetable oils; thermochemistry.

INTRODUCTION

Power production and transport are the two areas for which high growth rates are expected. They both still depend mainly on fossil fuels. However, their future evolutions are very different. Power production can use different fossil fuels, natural gas, and coal, as well as renewables—biomass (mainly wood, but also biowastes) and wind. Furthermore, carbon capture (followed by sequestration) can be envisioned for the large, fixed, fossil fuel-based power plants, leading to zero (or near-zero) emission plants. Transport fuels—gasoline (for cars), diesel (for trucks and cars), and kerosene (for aircrafts)—are entirely dependent on oil, with no possibility for carbon capture (and sequestration).

In order to control carbon dioxide emissions from transport, the introduction of biomass-derived components has been proposed and used for both gasoline (mainly ethanol, or a derivative of ethanol: ethyl-tertiobutyl-ether, ETBE) and at a later stage for diesel (methyl ester from vegetable oils).

If we consider the predicted growth of transport fuel on a world-wide scale (Fig. 1 and Table 1), we come to the following conclusions: (1) all fuels are expected to grow; (2) the fastest growth will be observed for kerosene; and (3) gasoline, the dominant fuel in 2005, will be superseded by middle distillates (kerosene and diesel).

The fast growth of kerosene has important consequences. Kerosene is very difficult to substitute, because of the very stringent specifications of this fuel (necessary for aircraft safety). Also, the current aircrafts have a very long life (at least 30 years). Thus, there will be a competition between diesel and kerosene, leading to constraints on diesel (this is not necessarily the case for gasoline). The introduction of a significant percentage of biomass-derived diesel components will not only help to control to some extent fossil carbon dioxide emissions, but also to fill the gap. The development of biodiesel is observed not only in Europe—where private car dieselization is increasing—but also in countries like Brazil and the United States, where mainly gasoline is used for private cars.

Pure Appl. Chem.* **79, 1831–2100. An issue of reviews and research papers based on lectures presented at the 1st International IUPAC Conference on Green–Sustainable Chemistry, held in Dresden, Germany, 10–15 September 2006.
‡Corresponding author

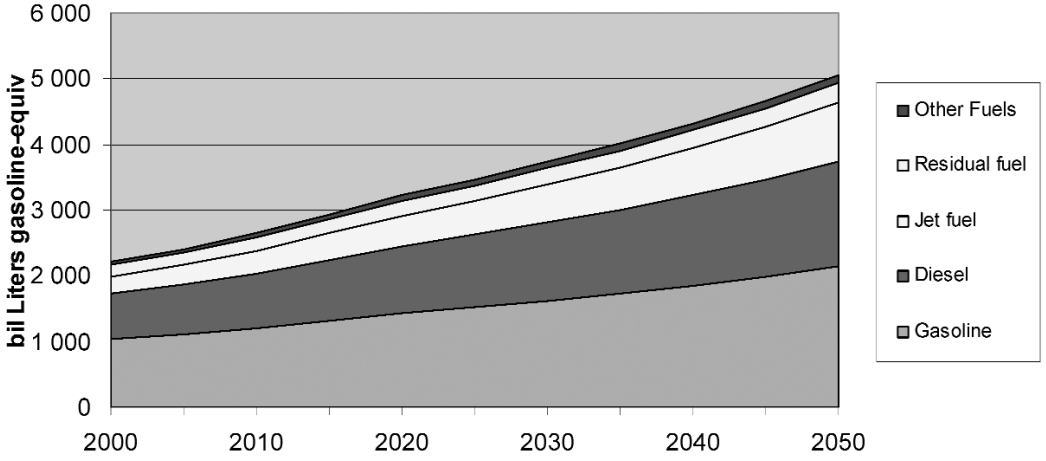

Fig. 1 An extrapolation of engine fuels usage (source: IFP).

Table 1 World fuel use by fuel type (%) (source: IFP).

	2005	2010	2020	2030
Gasoline	46.2	44.8	44.3	43.6
Diesel	31.2	31.6	31.8	31.7
Jet fuel	12.3	13.1	14.3	15.7
Residual fuel	8.0	7.6	6.9	6.5
Other fuels	2.3	2.8	2.6	2.5

FIRST-GENERATION BIODIESEL PROCESSES: METHYL ESTERS OF VEGETABLE OILS

The direct use of vegetable oils in diesel engines is well documented and has been proposed since the origin of the diesel engine. However, such a fuel is not compatible with commercial modern diesel engines. Even if some adaptations are implemented (especially fuel preheating), long-time performances cannot be guaranteed, and the stringent emission specifications are not attained.

The use of the methyl esters of vegetable oils was proposed as early as 1983 by Stern et al. [1], and one of the first industrial units was started in France near Compiègne in 1992, based on a French Petroleum Institute (IFP) design.

Methyl esters are produced from vegetable oils through transesterification. The transesterification of triglycerides to fatty acid methyl esters (FAME) with methanol is a balanced and catalyzed reaction, as illustrated in Fig. 2. An excess of methanol is required to obtain a high degree of conversion.

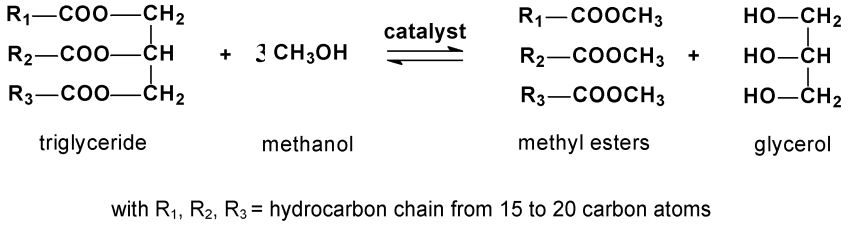

Fig. 2 Overall reaction for transesterification of vegetable oil (triglycerides) to produce biodiesel (methyl esters).

The conventional industrial biodiesel processes are based on homogeneous catalysis. Sodium hydroxide or sodium methylate are the most often used catalysts in industrial processes. The removal of homogeneous catalyst from the reactor effluent requires further downstream operations, which are illustrated in Fig. 3.

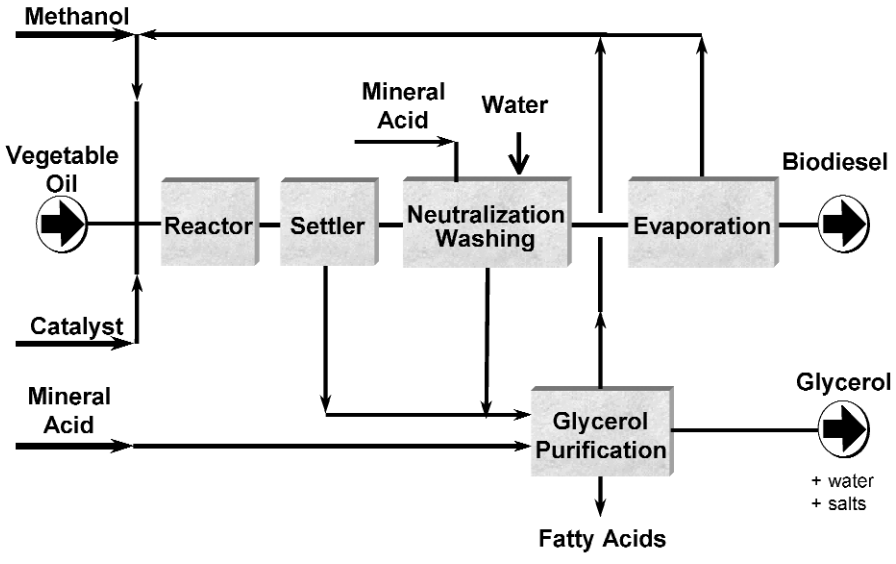

Fig. 3 Global scheme for a typical continuous homogeneous catalyzed process.

The biphasic effluent coming from reactor is separated in a settler. The ester-rich phase has to be neutralized and washed in order to remove traces of catalyst (Na + K content in the final ester needs to be lower than 5 ppm in order to respect EN14214). The bulk of catalyst is recovered after the transesterification reaction as sodium glycerate, sodium methylate, and sodium soaps in the glycerol phase. An acidic neutralization step with, for example, aqueous hydrochloric acid is required to neutralize these salts. In this case, glycerol is obtained as an aqueous solution containing sodium chloride. Depending on the process, the final glycerol purity is about 80–95 %. When sodium hydroxide is used as catalyst, side reactions forming sodium soaps generally occur. This type of reaction is also observed when sodium methylate is employed and traces of water are present. The sodium soaps are soluble in the glycerol phase and must be isolated after neutralization by decantation as fatty acids. The loss of esters converted to fatty acids can be as high as 1 % of the biodiesel production. The FAME yields obtained can vary from 98.5 up to 99.4 (wt %), depending on the feed quality and type of catalyst used.

Commercial industrial processes can be operated in a batch or continuous mode. Batch processes are more suitable for small plants, whereas for larger plants (>100 000 t/y), continuous processes tend to be more economical. In the ESTERFIP batch process (IFP licence), the transesterification reaction occurs in a single stirred-tank reactor. Continuous transesterification processes include the Ballestra, Connemann CD, and Lurgi PSI processes. These continuous processes require two or three reactors operated in series. After each catalytic reaction step, glycerol is removed either by gravity or centrifugation [2].

To be acceptable, the ester must respect specifications (for Europe: EN14214). The critical specifications are related to the cold properties and stability. These specifications limit the choice for the starting vegetable oils, as discussed below. In Europe, rapeseed and oleic sunflower oils are used; in Brazil, soybean oil is used.

These processes are satisfactory in several aspects: very active catalyst; good thermal efficiency, low energy consumption; range of capacity (100 000–250 000 t/y) well adapted to the capacity of the trituration plants. Finally, the product can be blended up to 30 wt % with diesel, without significant engine modifications.

However, this first-generation process has several characteristics that will limit the percentage of the diesel pool that can be substituted (in Europe, certainly less than 10 %).

The first limitation is linked to the highly limited choice of vegetable oils. Up to now, only edible vegetable oils have been considered, there is a competition between diesel and food production. Among these edible oils, the unsaturation of the fatty chains must be high enough to ensure good cold properties and low enough for acceptable stability. Only pure rapeseed oil and, to some extent, oleic sunflower oil can be used, as well as palm and soybean oil mixtures.

The yield per hectare (ha) for these crops does not significantly exceed 1 toe (ton oil equivalent)/ha/y, with only slight improvements in sight with this limited choice of oils. Furthermore, crop rotation is required to insure pest control and good yield, this leads to much lower available land for oil production. Practically, it will be difficult for biodiesel to exceed 5 % of the diesel pool in Europe.

Another difficulty, more directly linked to the process, is the production of impure glycerol (containing the salt resulting from the neutralization of the soluble catalyst by a mineral acid, either hydrochloric or sulfuric acid), in large amounts as compared to the existing markets of glycerol.

In a typical transesterification process, the final glycerol purity is about 80 %. The major impurities of the glycerol produced are water, salts (NaCl, Na_2SO_4, KCl... depending on the base used as catalyst and on the acid used for catalyst neutralization), and organic compounds such as esters and soaps.

Possible valorization of this crude glycerol is limited: it can be burned in furnaces (even though glycerol combustion may induce technical difficulties due to its high flash point and the presence of salts) or it can be incorporated into animal feed [3].

In view of the projected development of methyl ester of vegetable oil, it is absolutely necessary to develop new markets for glycerol. Three possibilities being considered are: cattle feeding components, intermediates for chemical synthesis, and intermediates to prepare a diesel component.

The crude glycerol can be refined in order to obtain the USP grade, used in pharmaceuticals, cosmetics, and food applications. The first step is to get rid of the neutralization salt. The purification scheme is rather complex and costly, especially if distillation is required. Furthermore, the reaction produces wastes (mainly, sodium salts polluted by organic compounds) that have to be disposed of.

IMPROVING THE TRANSESTERIFICATION ROUTE

The classical route involves very active soluble catalysts. As discussed above, the major drawback is the purification of the glycerol by-product. A simple way to avoid the problem is to turn to heterogeneous catalysis. Such a process has been developed by IFP and is being commercialized by Axens [4]. The first industrial unit was started in 2006, at Sète, in southern France.

In this new continuous process, the transesterification reaction is promoted by a completely heterogeneous catalyst, which consists of a mixed oxide to promote the transesterification reaction without catalyst loss [5]. The reaction is performed at higher temperature and pressure than in the homogeneous catalysis process, due to the lower activity of the solid catalyst.

The flow sheet of this process is presented in Fig. 4.

The desired chemical conversion, required to produce biodiesel meeting European specifications, is reached with two successive stages of reaction and glycerol separation in order to shift the equilibrium of methanolysis. The catalyst section includes two fixed-bed reactors, fed with vegetable oil and methanol at a given ratio. Excess methanol is removed after each reactor by partial evaporation. Esters and glycerol are then separated in a settler. Glycerol outputs are gathered, and the residual methanol is removed by evaporation. To meet European specifications, the last traces of methanol and glycerol have to be removed. The purification section of methyl ester output coming from the second decanter con-

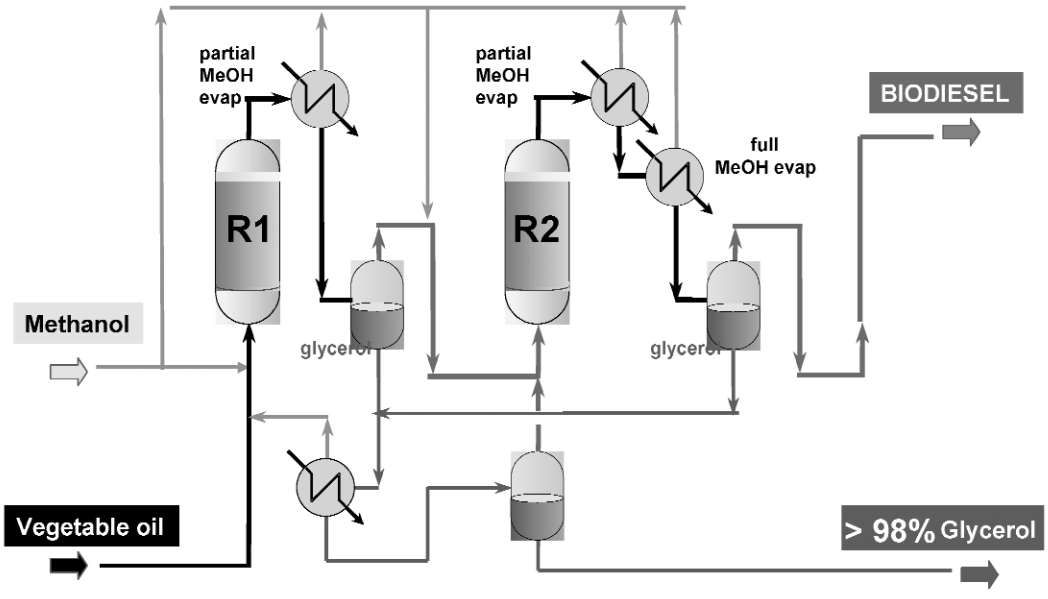

Fig. 4 Simplified flow sheet of the new heterogeneous process, Esterfip-H^{TM}.

sists of a finishing methanol vaporization under vacuum followed by a final purification in an adsorber for removing the soluble glycerol.

This new heterogeneous catalyst process offers the following main advantages:

- high biodiesel yield can be obtained, since there is no ester loss due to soap formation (FAME yield = 100 %);
- the crude glycerol obtained is salt-free and has a very high glycerol purity (>98 %), thus allowing new direct means of valorization;
- there is no consumption of chemical products; and
- there are no waste streams.

Another possibility for improving the overall efficiency of the process is to start not from the extracted oil—trituration is a rather complex first step—but directly from the rapeseed grains. Such a process, in which the oil contained in vegetable seeds is extracted and transesterified in one step, is called in situ transesterification. In that kind of process, alcohol serves both as an extracting agent for the oils from the seeds and as a reagent for alkyl esters production. In situ transesterification offers the advantages of substituting hexane and minimizing oil losses.

For in situ processes, ethanol is the preferred alcohol since it is a better solvant for oil and has a higher reactivity than higher alcohols. An in situ ethanolysis process has been patented [6]. A large amount of ethanol is needed for in situ ethanolysis and for further product purification: ethanol to ethyl ester weight ratios between 8–16 are reported for this process. Since only anhydrous ethanol can be used to avoid contamination of the ester product, with sulfurous or phosphorous compounds, this process should lead to high energy consumption for drying and recycling the large excess of ethanol used [7]. The downstream processing for esters and glycerol purification involves first removing the protein part of vegetable seeds by filtration, then neutralizing to remove basic catalyst, prior to the final ester purification.

PRODUCTION OF THE ETHYL ESTERS OF VEGETABLE OILS

Replacement of fossil-derived methanol by ethanol is an interesting objective:

- the ethyl esters would be 100 % derived from biomass; and
- this is a way to incorporate some ethanol in the diesel pool. This would help to fit the motor fuels consumption in Europe, where low and decreasing gasoline/diesel usage ratio makes ethanol a non-optimal biofuel.

However, using ethanol proves to be difficult for several reasons. First, the reaction is slower than with methanol: higher amounts of catalyst and/or higher temperatures are needed in order to balance the lower ethanol reactivity. Second, ethanol is a better solvent for oil and ethyl esters. In the case of homogeneous catalysis, the higher solvent effect of ethanol induces more severe thermodynamic limitations for oil conversion, since the glycerol by-product is much more soluble in ethanolysis reaction mixtures than in those for methanolysis. In contrast, in heterogeneous catalysis, the reaction mixture is monophasic with either methanol or ethanol. The thermodynamic limitations for oil conversion are then roughly the same whether using ethanol or methanol. Moreover, ethanol acting as a cosolvent makes glycerol extraction from ethyl esters more complex and costly. Finally, ethanol water content has to be low, but ethanol dehydration is more complex than for methanol, due to azeotrope formation. In homogeneous catalysis, water is a precursor to soap formation, leading to an increase of catalyst consumption and to a decrease in ester yield. In heterogeneous catalysis, water acts as an inhibitor of the catalyst, but does not affect either ester yield or glycerol purity.

Research is in progress in order to find ways of producing ethyl esters more economically. Heterogeneous catalysis should be a better way to produce ethyl esters than homogeneous catalysis, since methanol substitution by ethanol involves less technical difficulties.

ENZYMATIC CATALYSIS FOR TRANSESTERIFICATION

Biodiesel production using lipases from various microorganismes has been proposed [8]. As compared to other catalysts, these biocatalysts have at the same time advantages and drawbacks. Conversion can be carried out in moderate conditions (temperature, pressure, pH). The glycerol phase is easy to separate and purify (no alkaline catalyst residues). Also, the transesterification with long or branched-chain alcohols proceeds readily, which is not the case with the classical catalysts, as discussed above.

However, these biocatalysts require much longer reaction times with higher catalyst concentrations. The main difficulty for their industrial application is their high price. Though major improvements are to be expected in this field, this route cannot be considered to play an important role in the near future.

DIRECT HYDROGENATION OF VEGETABLE OIL AND ANIMAL FATS

Direct hydrogenation (more precisely, hydrogenolysis) of vegetable oils was proposed several years ago, using processes and catalysts similar to those used for middle distillate hydrotreatment, for example, $NiMo/Al_2O_3$ catalyst [9].

Such processes were considered as non-economical—not astonishingly with low oil prices—and, more recently, not competitive with the esterification route.

The reaction:

$$\begin{array}{l} CH_2-OCOR_1 \\ CH-OCOR_2 \\ CH_2-OCOR_3 \end{array} + 12H_2 \longrightarrow \begin{array}{l} R_1CH_3 \\ R_2CH_3 \\ R_3CH_3 \end{array} + C_3H_8 + 6H_2O$$

(with further hydrogenation in the case of unsaturated fatty chains R) produces straight-chain hydrocarbons and propane, with significant hydrogen consumption (of the order of 3 wt %).

There is renewed interest for this route for several reasons. The primary product is straight-chain paraffins as in Fischer–Tropsch synthesis. Very high-quality diesel (and kerosene) can then be obtained by subsequent hydrocracking (under mild conditions) of the primary product. The propane by-product feeds into important markets as a (motor) fuel, or as a petrochemical feedstock. A large variety of vegetable oils—including domestic ones—and animal fats can be processed to yield the same final, high-quality product. Finally, coprocessing with crude oil derived middle distillates is possible and even favorable.

Industrial hydrogenation plants are under development.

Neste Oil [10,11] has developed the NExBTL® process for which the first commercial plant has started in Finland. Coprocessing of vegetable oils with middle distillates, H-Bio process [12] has been started in Brazil by Petrobras. However, several problems must still be addressed.

The presence of a large amount of water in the hydrotreatment reactor could have adverse effects on the sulfided catalyst performance. For stand-alone processing, since vegetable oils do not have high sulfur content, new nonsulfided hydrotreating catalysts could be used.

For coprocessing, carbon monoxide, CO, which can be formed by hydrogenolysis of vegetable oils, has an inhibiting effect on hydrodesulfurization activity.

In the hydrotreatment conditions, unsaturated fatty chains are hydrogenated. The resulting straight chains, mainly C_{12} to C_{18}, are completely paraffinic. Such fully saturated compounds have excellent cetane index but generally bad cold flow properties compared to corresponding esters [9], which may require an additional hydroisomerization step.

This type of process opens the way to improving the yield per hectare as there are no longer any constraints on the chemical composition of the vegetable oils or fat (length of the fatty chains, degree of unsaturation).

THERMOCHEMICAL ROUTE: MIDDLE DISTILLATES FROM LIGNOCELLULOSIC MATERIAL

This is the so-called BTL (biomass to liquid) route. Such routes can start from any kind of biomass material. Contrary to the previously discussed processes, which require highly specific plants and can transform only part of the plants, (the "oily part"), the BTL route will transform the whole plant, i.e., lignocellulosic material (a complex mixture of oses: cellulose, hemicellulose, and lignin) obtained from forestry and agriculture sources (wood, straw, dedicated crops, plant waste). This appears to be the most promising approach for significantly increasing the production of biodiesel and bio middle distillates.

Four main steps are involved:

1. Biomass pretreatment, generally required before biomass can be admitted to step 2. The type of pretreatment depends on the material considered: wood, straw, dedicated crops, agricultural wastes. A partial pretreatment may be pertinent for logistic reasons, in order to bring sufficient quantities of biomass to the conversion plant (as will be discussed, the thermochemical route requires high-capacity plants).
2. High-temperature gasification with oxygen to obtain synthesis gas ($CO + xH_2$). Purification of the raw synthesis gas is a critical step.
3. Fischer–Tropsch synthesis to yield high-molecular-weight *n*-paraffins.
4. Hydrocracking of these paraffins to yield the final products (some gasoline, appropriate as a steam cracking feedstock, kerosene, and diesel, lubricating oil).

Steps 2 to 4 are established industrial technologies starting with natural gas (GTL) or coal (CTL) as feedstocks. Large commercial units are operating, and several new ones are under construction, ei-

ther from gas (in Qatar) or from coal (in China). The required technologies are commercially available, though with some restrictions.

Important modifications are required, mainly for steps 1 and 2 when considering biomass.

Concerning the first pretreatment step, two options are possible:

- The centralized option, which requires transportation of biomass resources to the processing site with high transport costs but better management of the process energy cycle.

In this case, a specific biomass gasification technology must be able to directly gasify biomass pellets after grinding. Such a BTL pilot plant is in operation in Germany [13].

This technology contains two main sections, first, a pyrolysis section to produce solid and gas (pretreatment), then a gasification section to produce syngas from the pyrolysis effluents.

- The decentralized option, which is more costly in terms of processing, but which minimizes transport costs. For this option, fast pyrolysis or torrefaction are the best pretreatment technologies.

Fast pyrolysis [14,15] processes can be used for biomass liquefaction at atmospheric pressure, vapor residence time of about 1 s, and temperature of around 500 °C. The fast pyrolysis condensates have about the same oxygen content and energy per unit weight as the initial biomass, but they are very fluid at room temperature and have a specific gravity of about 1.2.

Torrefaction [16] is a medium-temperature thermochemical process, around 250–300 °C, which significantly improves the grindability of wood and straw. The resulting solid contains more than 90 % of the initial calorific value and could probably be used, after grinding, as feedstock in a coal gasifier.

The production of an oil or a solid that is easier to transport means that these processes could be set up locally using medium-capacity units (a few tons per hour).

One of the main obstacles to the development of thermochemical conversion of lignocellulosic biomass into fuels is the control of the gasification process [17]. The first-generation technology will be probably based on existing processes adapted to coal, petcoke, or oil residues. During gasification, a complex combination of reaction in the solid, liquid, and gas phases occurs. At very high temperature, the syngas composition can reach thermodynamic equilibrium especially without methane and tars.

The entrained flow reactor is probably the best technology for further syngas Fischer–Tropsch (FT) synthesis. It works at very high temperatures of 1200–1500 °C and can operate under pressure (up to the pressure required for the FT synthesis).

Compared to fossil fuel technology, biomass gasification technology has to be adapted in terms of feed system, burner, and reactor wall.

For a coal or petcoke gasification technology, grinded torrefied biomass pretreatment could be used. For a liquid residue gasification technology, pyrolysis pretreatment will be better.

Due to the lower biomass calorific value than fossil feedstock, the gasification burner must be adapted. Last but not least, compared to fossil feedstock, biomass contains new components, especially metals. As in entrained flow technology, slags are removed on the gasifier wall, new kinds of such slags can be produced from biomass. The reactor wall must be adapted to biomass gasification [18]. Furthermore, the effect of alkalin metals, which are gaseous under gasification operating conditions, is not well known, especially in terms of corrosion.

Cleaning of the syngas produced by gasification consists of filtration and elimination of certain compounds (H_2S,COS,HCl,HCN,NH_3, tars, alkalin metals, etc.). This is a critical step for the feasibility and industrial profitability of the technology [19]. In comparison with known gasification technologies (for heat and electricity production) the purity of the syngas must be considerably improved (two- or three-fold). Many research programs to eliminate FT catalyst poisons are conducted to make the BTL process possible.

To optimize the energy balance of the BTL process, hot clean systems will be better than current systems.

We have seen that the main problem of the ester route to produce biodiesel (from vegetable oil) is the low yield per hectare. What about the thermochemical route?

If we come back to the average composition of lignocellulosic biomass, as discussed, for instance, in [20], and taking into account thermochemical consideration, the high-temperature gasification step will yield a syngas with a H_2/CO ratio higher than 1 but below 2, with a CO_2/CO ratio dependent on the technology used. Part of the carbon will be lost as CO_2 (that has to be separated before the Fischer–Tropsch synthesis step, at least when using high-efficiency, cobalt-based catalysts). Then it is necessary to adjust the syngas ratio to about 2. This is done by the shift reaction, which leads to a further production of CO_2. Overall, the yield of Fischer–Tropsch is about 40 %, expressed as toe/toe of biomass, or about 25 % expressed as toe/t dry.biomass (Fig. 5). For 10 t dry.biomass/ha/y, this leads to only 2.5 toe/ha.

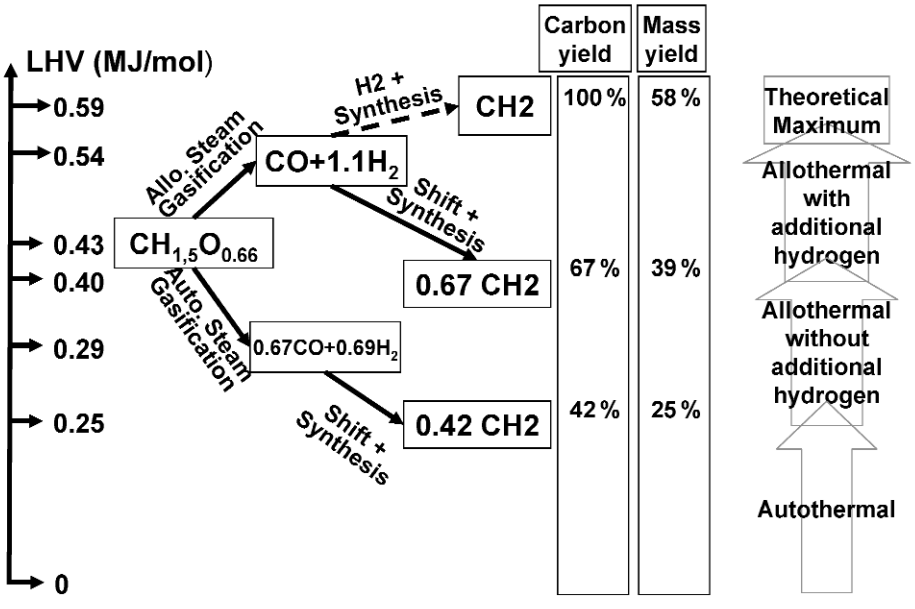

Fig. 5 Theorical BTL synfuel weight yield vs. kind of energy input (sources: IFP and CEA).

However, this rather low figure can be increased by intervention at two levels: bringing high-temperature heat (by "green" electricity) in the gasification step; adjusting the syngas composition by addition of "green" hydrogen (obtained by water electrolysis, again using "green" electricity). The overall yield can then be more than doubled.

With the thermodynamic analysis, it is possible to compare several kinds of processes, considering the kind of energy injected in the process, to perform the endothermic gasification [21]:

- An autothermal process is a process where the energy is taken from the biomass.
- An allothermal process is a process where the energy comes from another source.

Three cases are shown in Fig. 5.

- The first one (lowest mass yield) is autothermal.
- The second one is allothermal for the gasification, with a water gas shift step for H_2/CO adjusting.
- The third one is 100 % allothermal.

As shown in Fig. 5, mass yield maximization requires injection of external energy. If no external energy is injected, the mass yield is lowered because the combustion requires C and H from the biomass.

Starting from syngas, another product can be prepared that can be used as an efficient substitute of diesel: dimethyl ether (DME) [22,23]. DME can be obtained directly, using near commercial technology, or in two steps, going through methanol synthesis followed by a simple dehydration step. A special advantage of DME synthesis is that syngas with high CO_2 content can be used. Then, high yields of DME can be directly obtained via gasification of biomass, with the addition of "green" hydrogen in order to have $H_2/CO \leq 2$, $H_2/CO_2 \geq 3$.

ETHANOL TO DIESEL

Ethanol will become a commodity as a very important component of the gasoline pool, and may be used as a starting material for light olefin production. However, as has been discussed in the introduction of this paper, it would be of high interest to convert ethanol to diesel.

The required chemistry:

$$\text{ethanol} \xrightarrow{\text{dehydration}} \text{ethylene} + \text{water}$$

$$\text{ethylene} \xrightarrow{\text{oligomerization}} \text{linear oligomers } C_4\text{–}C_{20}$$

is well known, but the available processes are not adapted to the production of motor fuels; the processes of which require low-cost processes and catalysts, with still a fair selectivity.

CONCLUSION

Large perspectives are being opened for the production of diesel oil from biomass. Vegetable oils will remain very important starting materials. Significant improvements can still be expected for the esterification processes. However, it will be necessary to develop new markets for the large amounts of glycerin coproduced, preferably as motor fuel additives. The definition of a competitive process to produce the ethyl esters (instead of the methyl esters) will help to indirectly introduce ethanol as a component of the diesel pool. The other route, direct hydrogenation, will allow the use of nonselected vegetable oils (and fats) and produce very high-quality diesel components.

In parallel, the thermochemical route, using lignocellulosic material, will benefit from the improvements of the GTL and CTL processes, which will arise from start-up operation of numerous industrial plants. Further improvements, especially with respect to yield (in terms of final motor fuel per hectare and per year) may be expected at a later stage, through allothermic processes using green electricity and hydrogen.

REFERENCES

1. R. Stern, J. C. Guibet, J. Graille. *Rev. Inst. Fr. Pétrole* **38**, 121 (1983).
2. R. G. Bray. *Biodiesel Production*, SRI Consulting (2004).
3. C. Kijora, R. D. Kupsch. *Fett. Lipid* **98**, 240 (1996).
4. L. Bournay, D. Casanave, B. Delfort, G. Hillion, J. A. Chodorge. *Catal. Today* **106**, 190 (2005).
5. R. Stern, G. Hillion, J. J. Rouxel. U.S. Patent 5,908,946 (1999).
6. H. LeChien. FR Patent 2,784,116 (1998).
7. M. Mittelbach, C. Remschmidt. *Biodiesel: The Comprehensive Handbook*, pp. 87–88, Martin Mittelbach, Austria (2004).

8. M. Mittelbach, C. Remschmidt. *Biodiesel: The Comprehensive Handbook*, pp. 69–73, Martin Mittelbach, Austria (2004).
9. J. Monnier, G. Tourigny, D. W. Soveran, A. Wong, E. Hogan, M. Stumborg. U.S. Patent 5705722, Natural Resources Canada (1998).
10. S. Mikkonen, Neste Oil. New Biofuel Technology Developments. IFQC Biofuels Technology & Policy Briefing, Bruxelles, May (2005).
11. H. Erametsa. *NexBTL Biomass Liquid Biodiesel Technology, Hart World Refining & Fuels Conference*, Washington, DC, October (2005).
12. <www2.petrobras.com.br/tecnologia/ing/hbio.asp>
13. T. Blades, Choren Industry. *Sundiesel from Choren: The Way to Industrial Production*, *2nd International BTL Congress*, Berlin, October (2006).
14. T. Bridgwater. *Fast Pyrolysis of Biomass: A handbook*, Vol. 2, CPL Press, UK (2002).
15. H. Heinrich, E. Dingus, A. Kogel, K. Raffelt, R. Stahl, F. Weirich. *2nd World Conference and Technology Exhibition on Biomass for Energy, Industry and Climate Protection*, p. 729 (2004).
16. A. Van der Drift, ECN. Initial Biomass treatment for large scale Fischer–Tropsch production from imported biomass, BTLtec, Munich, October (2006).
17. H. Knoef. *Handbook of Biomass Gasification*, BTG Biomass Technology Group, Netherlands (2005).
18. M. J. Van der Burgt. In *Handbook of Biomass Gasification*, H. Knoef (Ed.), p. 248, BTG Biomass Technology Group, Netherlands (2005).
19. H. Laudal Iversen, B. Gobel. In *Handbook of Biomass Gasification*, H. Knoef (Ed.), p. 189, BTG Biomass Technology Group, Netherlands (2005).
20. D. Ballérini. *Les Biocarburants: États des Lieux, Perspectives et Enjeux du Dévelopement*, p. 226, Ed. Technip, Paris (2006).
21. G. Boissonnet, N. Boudet, J. M. Seiler, J. L. Duplan. "Process simulation and comparison of several biomass gasification routes for the production of Fischer–Tropsch liquids", 14th European Biomass Conference Exhibition, Paris (2005).
22. F. K. Hausen, L. Develsen, J. B. Hausen, S. E. Mikkelsen, H. Laudälv, T. Ristola, K. Vielwerth. *SAE Technical Paper Series 2000-01-2005* (2000).
23. H. Teng, G. Regnier. *SAE Technical Paper Series 2006-01-3324* (2006).